# UZMAN KARDAN

## MAKİNA OTOMOTİV SAN TİC LTD ŞTİ

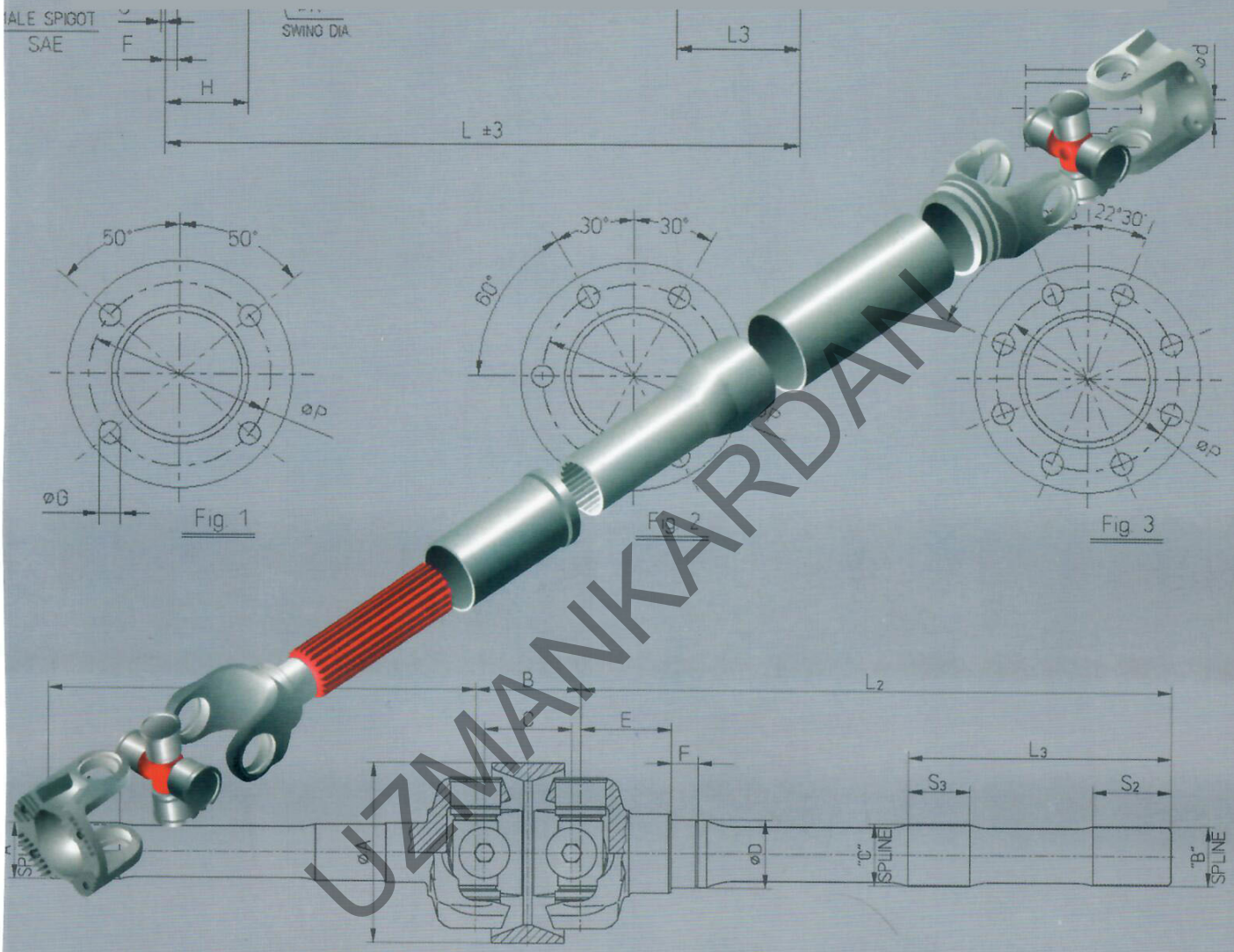




# TECHNICAL CATALOGUE

## TECHNISCHES KATALOG

## TEKNİK KATALOG

UZMAN KARDAN

MAKİNA OTOMOTİV SAN TİC LTD ŞTİ

# TECHNICAL CATALOGUE

## TECHNISCHES KATALOG

## TEKNİK KATALOG



2018

# UZMAN KARDAN
## MAKİNA OTOMOTİV SAN TİC LTD ŞTİ

## CONTENTS / INHALT / İÇİNDEKİLER

### SHAFT COMPONENTS / GELENKWELLEN TEILE / ŞAFT PARÇALARI



### SHAFTS, STEERING COLUMNS, D. JOINTS / GELENKWELLEN, LENKWELLEN, DOPPEL GELENKE ŞAFTLAR, DİREKSİYON ŞAFTLARI, ÇİFT MAFSALLAR



### REF. LIST / REF. LISTE / REF. LİSTESİ



* In addition our standard productions, most of which are shown in this catalogue, we can manufacture a large number of special designs.
* Zusaetzlich zu unseren Standard-Produkten, die im allgemeinen in diesem Katalog ausgeführt sind. Können wir auch Sonderbestellungen produzieren, falls ausreichende Mangen angefragt weren.
* Büyük bir kısmı bu katalogta yer alan standart üretimlerimize ilaveten, yeterli miktardaki özel siparişlerinizi de karşılayabiliriz

# UZMANKARDAN

## COMPANION FLANGES / KUPPLUNGSFLANSCHE / ARA FLANŞLAR



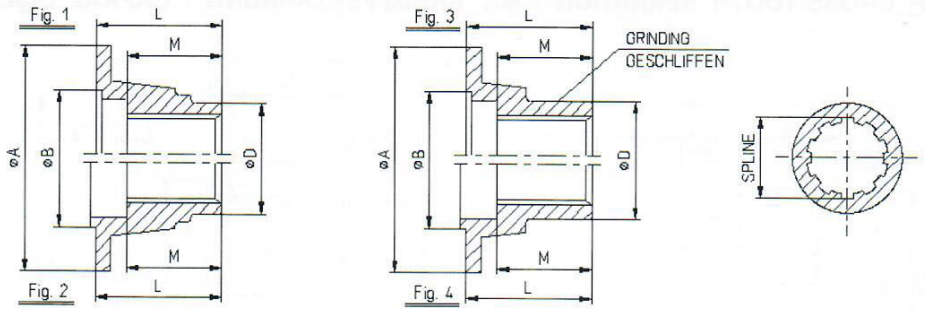


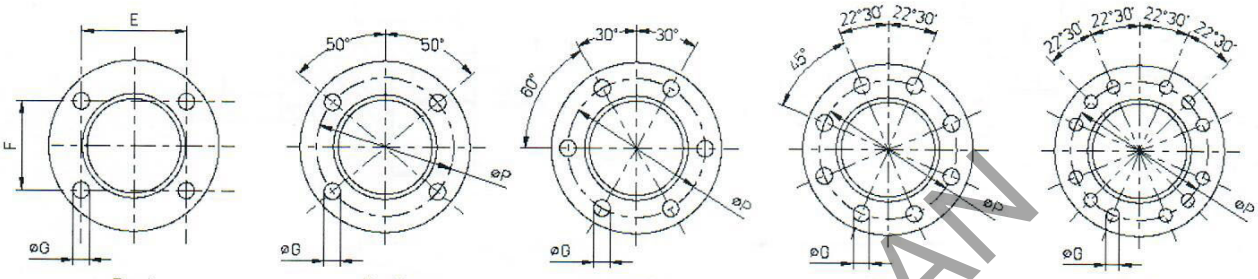


**KAT-01/1**

25/12/2008

| SERIE BAUGR SERİ | NEW PART NO TEIL NR NEU YENİ PARÇA NO | REF. | FİG. | A | B | D | L | M | P | E | F | NO.OF HOLES xG LOCHANZAHL xG DELİK ADEDİ xG | SPLINE DATA ZAHNPROFIL KANAL ÖLÇÜLERİ |
|---|---|---|---|---|---|---|---|---|---|---|---|---|---|
| 1140 | 41140100200 * | FORD 76BG-4K161-AA | 3A | 107 | 56,0 | 40,0 | 54,0 | 30,4 | - | 67,03 | 60,03 | 4 x M10 | T23(22);24/48;45° |
| | 41140100600 * | - | 3B | 88 | 57,2 | 46,0 | 67,0 | 37,0 | 69,9 | - | - | 4 x 8,1 | T30;24/48;45° |
| 1310 | 41310100100 * | - | 3B | 97 | 60,3 | 47,6 | 62,0 | 38,0 | 79,3 | - | - | 4 x 9,8 | T29;24/48;30° |
| | 31310100900 | H.S.3101-2831 | 1B | 97 | 60,3 | 42,9 | 60,7 | 36,5 | 79,3 | - | - | 4 x 9,8 | SAE 1 3/8" x 10C |
| | 31310101300 | - | 2C | 100 | 57,0 | 42,9 | 60,7 | 36,5 | 84,0 | - | - | 6 x 8,2 | SAE 1 3/8" x 10C |
| | 31310101400 | - | 1B | 97 | 60,3 | 42,9 | 60,7 | 36,5 | 79,3 | - | - | 4 x 10,2 | SAE 1 3/8" x 10C |
| | 41310101500 * | FORD 81VB-4851-AA | 3A | 107 | 56,0 | 42,0 | 36,5 | 35,5 | - | 67,03 | 60,03 | 4 x M10 | T28;24/48;45° |
| | 41310101900 * | FORD 93VB-4858-AA | 3A | 120 | 56,0 | 42,0 | 38,5 | 35,5 | - | 83,2 | 48,0 | 4 x M12 | T28;24/48;45° |
| 1410 | 41410100300 * | - | 3B | 118 | 69,9 | 47,6 | 52,4 | 38,1 | 95,3 | - | - | 4 x 11,3 | T29;24/48;45° |
| | 31410100600 | - | 1B | 118 | 69,9 | 49,2 | 68,3 | 50,8 | 95,3 | - | - | 4 x 12,4 | SAE 1 1/2" x 10C |
| | 31410100700 | - | 3B | 118 | 69,9 | 39,7 | 55,4 | 41,1 | 95,3 | - | - | 4 x 11,3 | T23;19,5/39;30° |
| | 31410101000 | H.S.4101-6221 | 1B | 118 | 69,9 | 49,2 | 68,3 | 50,8 | 95,3 | - | - | 4 x 11,3 | SAE 1 1/2" x 10C |
| | 41410101100 * | FIAT S.P.A.4715158 | 3B | 118 | 69,9 | 50,0 | 49,5 | 34,5 | 95,3 | - | - | 4 x 12,4 | T12;M=2,75;30° |
| | 31410101400 | - | 1A | 120 | 80,0 | 49,2 | 68,3 | 50,8 | - | 80,90 | 58,78 | 4 x 10,3 | SAE 1 1/2" x 10C |
| | 31410102600 | - | 1B | 120 | 70,0 | 49,2 | 68,3 | 50,8 | 100,0 | - | - | 4 x 12,2 | SAE 1 1/2" x 10C |
| | 31410102700 | - | 2D | 120 | 75,0 | 49,2 | 68,3 | 50,8 | 101,5 | - | - | 8 x 10,2 | SAE 1 1/2" x 10C |
| | 31410102800 | - | 1A | 120 | 80,0 | 49,2 | 68,3 | 50,8 | - | 80,90 | 58,78 | 4 x 12,3 | SAE 1 1/2" x 10C |
| 1510 | 31510100100 | H.S.5101-3901 | 3B | 146 | 95,3 | 57,2 | 65,1 | 50,8 | 120,7 | - | - | 4 x 12,8 | SAE 1 1/2" x 10C |
| | 31510100200 | H.S.5101-4021 | 1B | 146 | 95,3 | 49,2 | 68,3 | 50,8 | 120,7 | - | - | 4 x 12,8 | SAE 1 1/2" x 10C |
| | 31510101100 | - | 3B | 146 | 95,3 | 54,0 | 66,5 | 50,8 | 120,7 | - | - | 4 x 12,8 | T35;24/48;45° |
| | 31510101200 | - | 3B | 146 | 95,3 | 60,0 | 76,1 | 57.0 | 120,7 | - | - | 4 x 14,4 | SAE 1 1/2" x 10C |
| | 31510101300 | - | 1B | 146 | 95,3 | 49,2 | 68,3 | 50,8 | 120,7 | - | - | 4 x 14,4 | SAE 1 1/2" x 10C |
| | 31510101900 | - | 1B | 146 | 95,3 | 55,6 | 76,1 | 57.0 | 120,7 | - | - | 4 x 12,8 | SAE 1 3/4" x 10C |
| | 31510102100 | - | 3B | 146 | 95,3 | 60,0 | 76,1 | 57.0 | 120,7 | - | - | 4 x 14,4 | SAE 1 3/4" x 10C |
| | 31510103100 | - | 1B | 146 | 95,3 | 55,6 | 76,1 | 57.0 | 120,7 | - | - | 4 x 14,4 | SAE 1 3/4" x 10C |
| | 31510103200 | - | 1B | 146 | 95,3 | 55,6 | 70,0 | 50,8 | 120,7 | - | - | 4 x 14,4 | SAE 1 3/4" x 10C |
| | 31510103400 | - | 1B | 146 | 95,3 | 55,6 | 70,0 | 50,8 | 120,7 | - | - | 4 x 14,2 | SAE 1 3/4" x 10C |
| | 31510103600 | - | 2D | 120 | 75,0 | 55,6 | 68,5 | 50,8 | 101,5 | - | - | 8 x 10,2 | SAE 1 3/4" x 10C |
| 1630 | 31630100900 | - | 1D | 175 | 168,3 | 62,2 | 80,1 | 65,3 | 155,6 | - | - | 8 x 9,8 | N55x2,5x20 DIN5480 |
| | 31630101200 | - | 1A | 135 | 80,0 | 55,6 | 69,0 | 58,0 | - | 95,3 | 55,0 | 4 x 12,3 | SAE 1 3/4" x 10C |
| | 31630101300 | - | 2D | 120 | 75,0 | 55,6 | 78,5 | 64,5 | 101,5 | - | - | 8 x 10,2 | SAE 1 3/4" x 10C |
| | 31630101400 | - | 4D | 120 | 75,0 | 65,0 | 83,0 | 68,0 | 101,5 | - | - | 8 x 10,2 | SAE 1 3/4" x 10C |
| 385 | 33850100100 | M.B.3854110045 | 2D | 150 | 90,0 | 70,1 | 82,0 | 66 | 130,0 | - | - | 8 x 12,2 | N55x2,5x20 DIN5480 |

(*) WITH DUST FLINGER / MIT SCHUTZKAPPE / TOZ SAVURUCULU

# UZMANKARDAN

## 2 COMPANION FLANGES / KUPPLUNGSFLANSCHE / ARA FLANŞLAR
### ( WITH CROSS-TOOTH SERRATION / MIT KREUZVERZAHNUNG / ÇAPRAZ DİŞLİ )

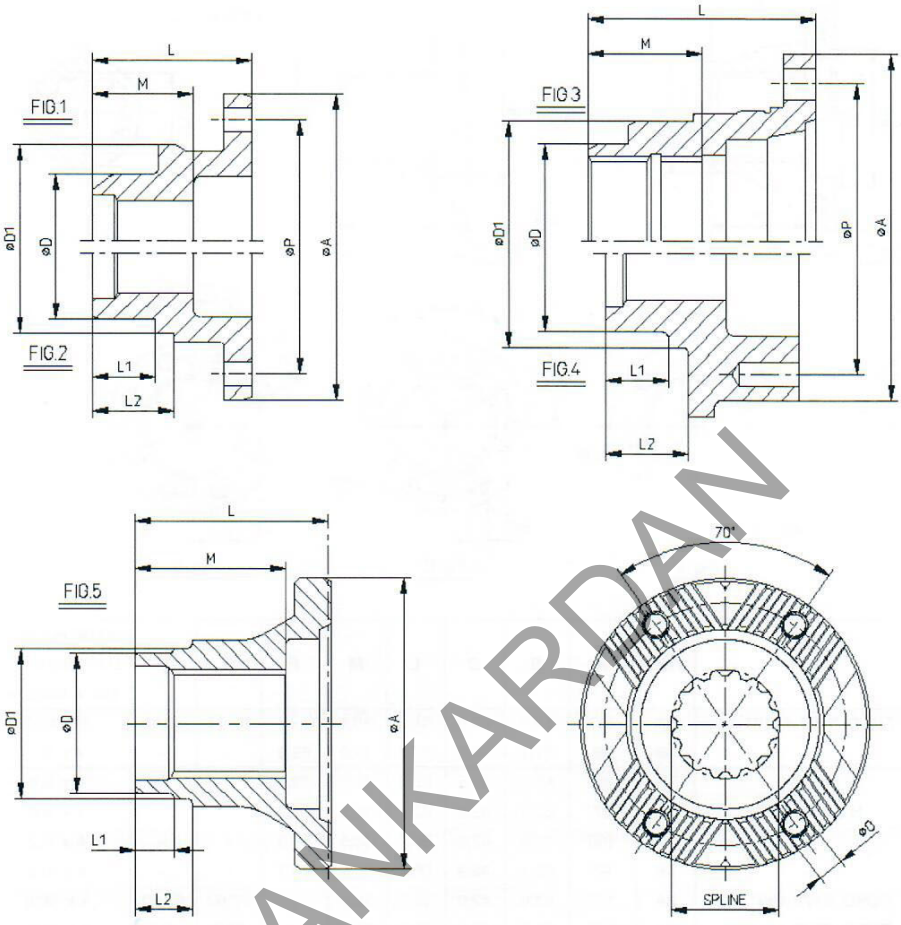




KAT-01/2 25/12/2008

| SERIE BAUGR SERİ | PART NO TEIL NR PARÇA NO | REF. | FIG. | A | D | D1 | L | M | L1 | L2 | P | NO.OF HOLES xG LOCHANZAHL xG DELİK ADEDİ xG | SPLINE DATA ZAHNPROFIL KANAL ÖLÇÜLERİ |
|---|---|---|---|---|---|---|---|---|---|---|---|---|---|
| 000 | 30000108200 | 454/30030 | 2 | 120 | 65 | 76,4 | 54,5 | 42 | 28 | 34 | 100 | 4xM10*1,5 | T38;24/48;30° |
| | 30000108300 | 454/99201 | 1 | 120 | 55 | 78,75 | 66,15 | 42 | 27,5 | 34,5 | 100 | 4x11 | T32;24/48;30° |
| | 30000108400 | 454/28300 | 2 | 120 | 55 | 74 | 66,15 | 42 | 28 | 34 | 100 | 4x11 | T32;24/48;30° |
| | 30000112600 | 459/70391 | 1 | 120 | 55 | 79 | 66,15 | 41 | 27,5 | 34,5 | 100 | 4x11 | T35;24/48;30° |
| | 30000112900 | 1304.315.022 | 3 | 180 | 80 | 90,7 | 122 | 55,5 | 27,5 | 66 | 150 | 4x15 | N70x2x34-DIN5480 |
| | 30000113300 | 1304.338.097 | 3 | 180 | 80 | 99 | 122,4 | 55,2 | 24,7 | 82,2 | 150 | 4x15 | N70x2x34-DIN5480 |
| | 30000113400 | 1304.338.105 | 3 | 155 | 80 | 99 | 122,4 | 55,2 | 24,7 | 61,7 | 130 | 4x13 | N70x2x34-DIN5480 |
| | 30000113800 | 1308.338.013 | 2 | 150 | 72 | 80 | 75 | 59,5 | 17,5 | 44,5 | 130 | 4x13 | N65x2x31-DIN5480 |
| | 30000114200 | 1308.338.025 | 2 | 180 | 72 | 80 | 75 | 59,5 | 17,5 | 44,5 | 150 | 4x15 | N65x2x31-DIN5480 |
| | 30000114400 | 1336.338.002 | 2 | 155 | 102 | 105 | 97,75 | 78 | 38,6 | 69 | 130 | 4x13 | N80x2x38-DIN5480 |
| | 30000114500 | 1336.338.007 | 2 | 180 | 102 | 105 | 107,7 | 78 | 38,6 | 57,5 | 150 | 4x15 | N80x2x38-DIN5480 |
| | 30000115000 | 1304.338.108 | 3 | 180 | 70 | 80 | 122,4 | 55,2 | 27,7 | 61,7 | 150 | 4x15 | N70x2x34-DIN5480 |
| | 30000115100 | 458/20797 | 4 | 135 | 65 | 76,1 | 80 | 41 | 28 | 34 | 100 | 8xM10*1,5 | T38;24/48;30° |
| | 30000115200 | 458/20796 | 4 | 121 | 85 | 87 | 61,5 | 43 | 29,5 | 43 | 100 | 4xM10*1,5 | T26;M=2,0;30° |
| | 30000115800 | 1308.338.029 | 3 | 150 | 72 | 80 | 106,7 | 59,5 | 17,5 | 44,5 | 130 | 4x13 | N65x2x31-DIN5480 |
| | 30000116200 | 1304.338.116 | 3 | 155 | 80 | 99 | 161,4 | 55,2 | 24,7 | 61,7 | 130 | 4x13 | N70x2x34-DIN5480 |
| | 30000116400 | 2.112.18.56.11.520 | 2 | 180 | 85 | 128 | 76,5 | 63,3 | 36 | 61 | 150 | 4x15 | N65x2x31-DIN5480 |
| 163 | 31630101500 | --- | 5 | 120 | 55,6 | 65,1 | 76,0 | 51,0 | 16,7 | 25,3 | 100,0 | 4 x 11,1 | SAE 1 3/4" x 10C |
| 381 | 33810100100 | MB: 971 411 00 45 | 5 | 120 | 58,1 | 62,0 | 80,0 | 62,5 | 16,0 | 37,5 | 100,0 | 4 x M10x1 | 45x2,5x16 DIN5480 |
| | 33810100200 | --- | 5 | 120 | 55,6 | 65,1 | 80,0 | 62,5 | 16,7 | 25,3 | 100,0 | 4 x M10x1 | 45x2,5x16 DIN5480 |
| 385 | 33850101000 | MB: 650 411 00 46 | 5 | 150 | 70,1 | 74,0 | 82,0 | 66,0 | 13,0 | - | 130,0 | 4 x 13,1 | 55x2,5x20 DIN5480 |
| | 33850101001 | --- | 5 | 150 | 62,2 | 71,5 | 82,0 | 66,0 | 16,8 | 25,4 | 130,0 | 4 x 13,1 | 55x2,5x20 DIN5480 |
| | 33850101500 | --- | 5 | 180 | 62,2 | 71,5 | 78,5 | 71,0 | 16,8 | 25,4 | 150,0 | 4 x 15,1 | 55x2,5x20 DIN5480 |
| 389 | 33890100200 | MB: 654 411 00 45 | 5 | 150 | 74,1 | 80,0 | 97,5 | 90,0 | 16,0 | - | 130,0 | 4 x 13,1 | 60x2,5x22 DIN5480 |
| | 33890100300 | --- | 5 | 150 | 74,1 | 84,2 | 97,5 | 90,0 | 16,0 | 26,1 | 130,0 | 4 x 13,1 | 60x2,5x22 DIN5480 |
| | 33890100400 | --- | 5 | 180 | 73,1 | 84,2 | 97,5 | 90,0 | 16,0 | 26,1 | 150,0 | 4 x 15,1 | 60x2,5x22 DIN5480 |
| | 33890100600 | --- | 5 | 180 | 73,1 | 84,2 | 78,0 | 69,0 | 17,5 | 27,6 | 150,0 | 4 x 15,1 | 60x2,5x22 DIN5480 |
| 395 | 33950100100 | MAN: 81.39115.0175 | 5 | 180 | 85,0 | 90,5 | 75,0 | 63,2 | 36,0 | 46,0 | 150,0 | 4 x 15,1 | 65x2x31 DIN5480 |
| | 33950100300 | --- | 5 | 180 | 84,2 | 94,5 | 98,5 | 91,0 | 17,4 | 27,6 | 150,0 | 4 x 15,1 | 65x2x31 DIN5480 |
| 468 | 34685700100 | --- | 5 | 180 | 84,2 | - | 100,0 | 92,5 | 19,5 | - | 150,0 | 4 x 15,1 | 70x2,5x26 DIN5480 |

# UZMANKARDAN

## COMPANION FLANGES / KUPPLUNGSFLANSCHE / ARA FLANŞLAR



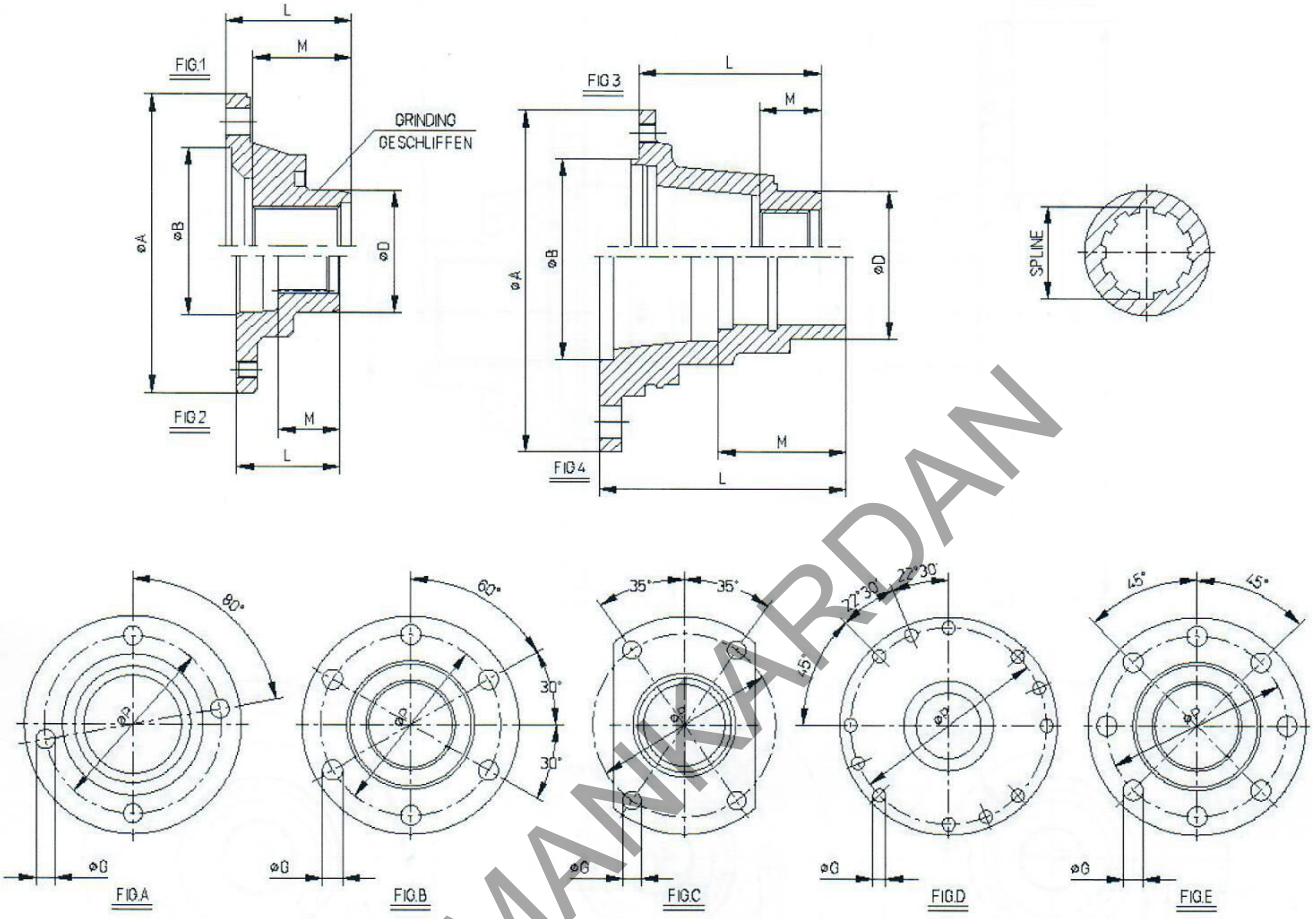




**KAT-01/3** 25/12/2008

| SERIE BAUGR SERİ | NEW PART NO TEIL NR NEU YENİ PARÇA NO | REF. | FİG. | A | B | D | L | M | P | E | F | NO.OF HOLES xG LOCHANZAHL xG DELİK ADEDİ xG | SPLINE DATA ZAHNPROFIL KANAL ÖLÇÜLERİ |
|---|---|---|---|---|---|---|---|---|---|---|---|---|---|
| 000 | 30000105400 | 449/01602 | 1A | 147 | 95,3 | 55,0 | 61,4 | 48 | 120,6 | | | 4x12,8 | T35;24/48;30° |
| | 30000107000 | 331/12043 | 2A | 122 | 69,9 | 55,0 | 64,5 | 42 | 95,25 | | | 4x11,2 | T32;24/48;30° |
| | 30000107300 | 459/70154 | 2B | 132,5 | 54,0 | 55,0 | 50,0 | 30 | 110 | | | 6xM8-1,25 | T32;24/48;30° |
| | 30000107500 | 450/27401 | 3E | 150 | 90,0 | 55,0 | 52,9 | 42 | 130 | | | 8x12,2 | T32;24/48;30° |
| | 30000110500 | 459/70330 | 3B | 132,5 | 85,6 | 55,0 | 89,0 | 30 | 110 | | | 6xM8-1,25 | T32;24/48;30° |
| | 30000111500 | 459/70352 | 3B | 132,5 | 85,6 | 55,0 | 65,5 | 30 | 110 | | | 6xM8-1,25 | T32;24/48;30° |
| | 30000111600 | 459/70349 | 3B | 132,5 | 85,6 | 55,0 | 58,0 | 30 | 110 | | | 6xM8-1,25 | T32;24/48;30° |
| | 30000113200 | 1304 338 095 | 4C | 190 | 100 | 80,0 | 120,5 | 54,6 | 160 | | | 4x16,1 | N70x2x34-DIN5480 |
| | 30000113900 | 1308 338 014 | 4D | 204 | 77 | 80,0 | 73,5 | 59,5 | 184,2 | | | 12x12,1 | N65x2x31-DIN5480 |
| | 30000114000 | 1308 338 015 | 4E | 175 | 77 | 80,0 | 73,5 | 59,5 | 155,52 | | | 8x10,1 | N65x2x31-DIN5480 |
| | 30000114600 | 1238 310 016 | 3E | 120 | 75,0 | 55,0 | 54 | 48 | 101,5 | | | 8x10,1 | SAE Ø36x8 |

(*) WITH DUST FLINGER / MIT SCHUTZKAPPE / TOZ SAVURUCULU

## 4 DISC - PARK BRAKE / KUPPLUNGSFLANSCHE / FREN DISKLERI

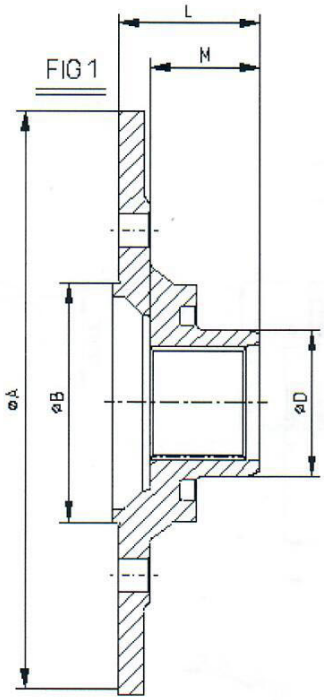


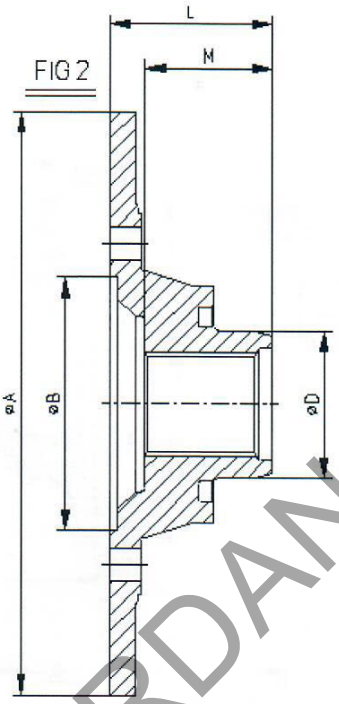


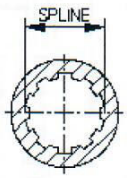


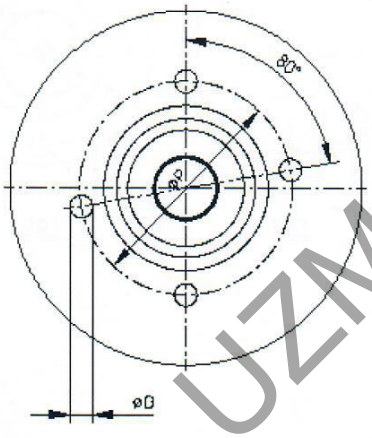


FIG.A

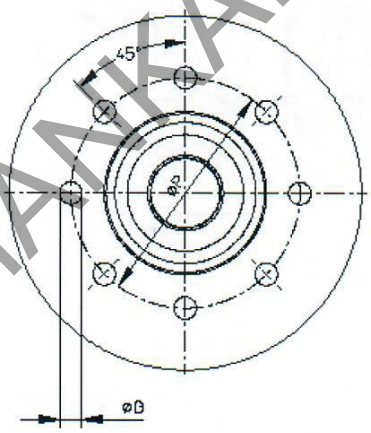


FIG.B

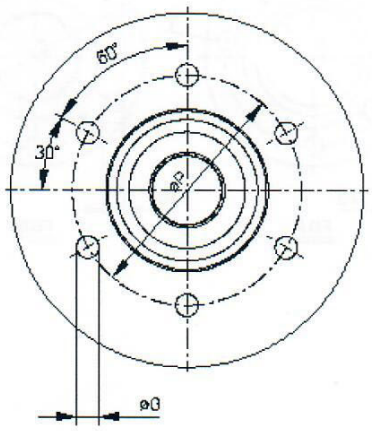


FIG.C



**KAT-01/4** 25/12/2008

| SERIE BAUGR SERİ | NEW PART NO TEIL NR NEU YENİ PARÇA NO | REF. | FİG. | A | B | D | L | M | P | E | F | NO.OF HOLES xG LOCHANZAHL xG DELİK ADEDİ xG | SPLINE DATA ZAHNPROFIL KANAL ÖLÇÜLERİ |
|---|---|---|---|---|---|---|---|---|---|---|---|---|---|
| 000 | 30000105200 | 448/37307 | 1B | 280 | 75,0 | 55,0 | 82 | 42 | 101,5 | | | 8xM10*1,5 | T32;24/48;30° |
| | 30000105500 | 460/35609 | 2A | 279,4 | 95,3 | 55,0 | 61,4 | 48 | 120,6 | | | 4x12,8 | T35;24/48;30° |
| | 30000105700 | 454/99203 | 2B | 279,4 | 90,0 | 55,0 | 53,4 | 41,5 | 130 | | | 8x12,6 | T38;24/48;30° |
| | 30000105900 | 460/12001 | 2A | 279,4 | 95,3 | 55,0 | 61,4 | 48 | 120,6 | | | 4x12,8 | T22;16/32;30° |
| | 30000107600 | 459/70120-2 | 2A | 279,4 | 95,3 | 55,0 | 72,9 | 42 | 120,6 | | | 4x12,8 | T32;24/48;30° |
| | 30000108000 | 445/70404 | 2A | 279,4 | 95,3 | 55,0 | 61,4 | 48 | 120,6 | | | 4x12,8 | T22;16/32;30° |
| | 30000109600 | CKB 68944 | 1C | 203,2 | 57,0 | 48,0 | 64,2 | 41 | 84,0 | | | 6xM8*1,25 | T23;16/32;30° |
| | 30000109700 | CKB 70230 | 1B | 203,2 | 75,0 | 48,0 | 64,2 | 41 | 101,5 | | | 8xM10*1,5 | T23;16/32;30° |
| | 30000110000 | CKA 69397 | 2A | 280 | 95,3 | 48,0 | 78,5 | 41 | 120,65 | | | 4x11,5 | T23;16/32;30° |
| | 30000112500 | 459/70390 | 1B | 270 | 90,0 | 80,0 | 63,9 | 53,5 | 130 | | | 8x12,6 | T33;16/32;30° |

# UZMANKARDAN

## FLANGE YOKES / GABELFLANSCHE / FLANŞLI ÇATALLAR



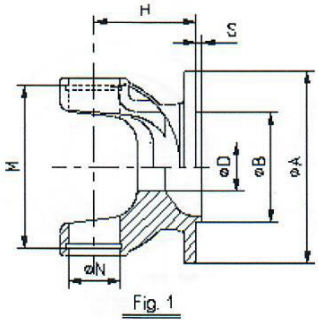

Fig. 1

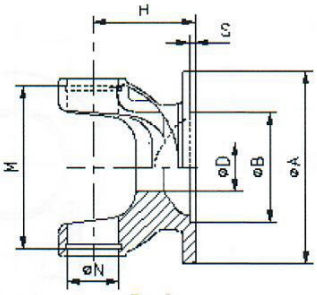

Fig. 2

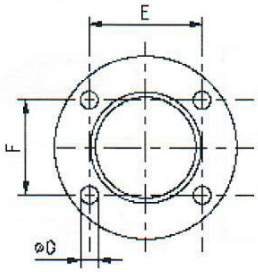

Fig. A

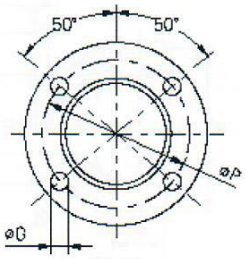

Fig. B

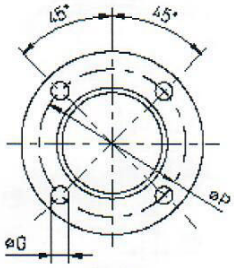

Fig. C

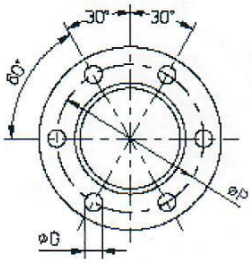

Fig. D

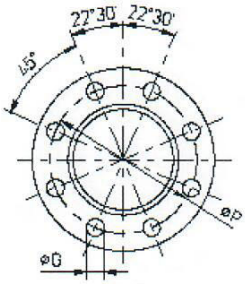

Fig. E

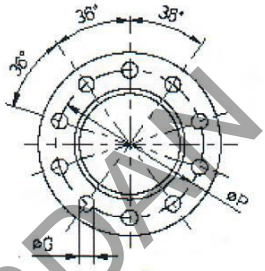

Fig. F

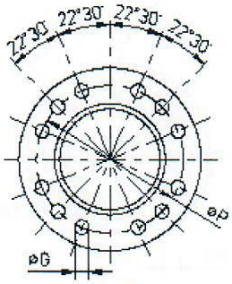

Fig. G

**KAT-02/1** **05/12/2008**

| SERIE BAUGR SERİ | NEW PART NO TEIL NR NEU PARÇA NO | REF. | FIG. | A | B | D | H | M | N | P | E | F | ß° | NO.OF HOLES x G LOCHANZAHL x G DELİK ADEDİ x G |
|---|---|---|---|---|---|---|---|---|---|---|---|---|---|---|
| | 31140200100 | HS:1402-039/DS:1-2-39 | 1B | 88 | 57,1 | - | 30,2 | 64,2 | 23,8 | 69,9 | - | - | 17° | 4 x 8,2 |
| | 31140202800 | HS: 1402-1359 | 2D | 75 | 42,0 | - | 39,0 | 64,2 | 23,8 | 62,0 | - | - | 25° | 6 x 6,2 |
| | 31140202900 | HS: 1402-1369 | 2C | 90 | 47,0 | 36,0 | 40,0 | 64,2 | 23,8 | 74,5 | - | - | 25° | 4 x 8,2 |
| 1140 | 31140203200 | - | 2D | 90 | 47,0 | 29,0 | 40,0 | 64,2 | 23,8 | 74,5 | - | - | 25° | 6 x 9,2 |
| | 31140203300 | HS: 1402-1379 | 1A | 109,5 | 56,0 | 35,0 | 40,6 | 64,2 | 23,8 | - | 67,03 | 60,03 | 22° | 4 x 10,4 |
| | 31140203700 | FIAT 4534785 | 1B | 88 | 57,1 | - | 36,0 | 64,2 | 23,8 | 69,9 | - | - | 25° | 4 x 8,2 |
| | 31140203900 | - | 1B | 92 | 57,1 | 29,0 | 40,1 | 64,2 | 23,8 | 76,2 | - | - | 25° | 4 x 9,8 |
| | 31140204100 | - | 1B | 92 | 57,1 | 29,0 | 40,1 | 64,2 | 23,8 | 77,8 | - | - | 25° | 4 x 8,2 |
| | 31140204300 | | 1B | 92 | 60,3 | 29,0 | 40,1 | 64,2 | 23,8 | 74,0 | | | 25° | 4 x 10,2 |
| | 31300200400 | BRD: 03/202092 | 1B | 92 | 57,1 | - | 35,0 | 77,5 | 27,0 | 76,20 | - | - | 20° | 4 x 9,8 |
| | 31300200800 | HS: 3002-1409 | 1A | 109,5 | 56,0 | 37,0 | 40,6 | 77,5 | 27,0 | - | 67,03 | 60,03 | 20° | 4 x 10,4 |
| | 31300202100 | HS: 3002-239 | 1B | 97 | 60,3 | - | 35,0 | 77,5 | 27,0 | 79,4 | - | - | 20° | 4 x 9,8 |
| | 31300202200 | HS: 3002-1429 | 1A | 120 | 40,0 | 17,0 | 40,6 | 77,5 | 27,0 | - | 83,2 | 48,0 | 20° | 4 x 12,3 |
| 1300 | 31300202400 | - | 1A | 120 | 56,0 | 41,5 | 40,6 | 77,5 | 27,0 | - | 83,2 | 48,0 | 20° | 4 x 12,3 |
| | 31300202800 | - | 2C | 120 | 64,0 | 34,0 | 40,6 | 77,5 | 27,0 | 100,0 | - | - | 20° | 4 x 12,3 |
| | 31300202900 | - | 1B | 97 | 60,3 | - | 35,0 | 77,5 | 27,0 | 79,4 | - | - | 20° | 4 x 10,2 |
| | 31300203100 | - | 1B | 92 | 57,1 | - | 40,5 | 77,5 | 27,0 | 77,8 | - | - | 20° | 4 x 8,2 |
| | 31300203200 | - | 1B | 92 | 57,1 | - | 40,5 | 77,5 | 27,0 | 69,9 | - | - | 20° | 4 x 8,2 |
| | 31300203400 | - | 2C | 89 | 47,0 | 36,0 | 40,5 | 77,5 | 27,0 | 74,5 | - | - | 20° | 4 x 8,2 |
| | 31310200100 | HS:3102-329/DS:2-2-329 | 1B | 97 | 60,3 | - | 35,0 | 84,7 | 27,0 | 79,4 | - | - | 20° | 4 x 9,8 |
| | 31310200200 | HS:3102-1329 | 1B | 92 | 57,1 | - | 35,0 | 84,7 | 27,0 | 76,2 | - | - | 20° | 4 x 9,8 |
| | 31310201900 | HS:3102-459/DS:2-2-459 | 1B | 96 | 60,3 | - | 41,4 | 84,7 | 27,0 | 79,4 | - | - | 30° | 4 x 9,8 |
| | 31310202300 | - | 1A | 105 | 65,0 | - | 41,4 | 84,7 | 27,0 | 85,0 | 68,77 | 49,96 | 30° | 4 x 10,3 |
| | 31310202500 | | 2D | 100 | 57,0 | - | 48,0 | 84,7 | 27,0 | 84,0 | | | 25° | 6 x 8,2 |
| | 31310203000 | HS: 3102-9048 | 2C | 90 | 47,0 | - | 50,0 | 84,7 | 27,0 | 74,5 | - | - | 30° | 4 x 8,2 |
| | 31310203700 | - | 1B | 97 | 60,3 | - | 35,0 | 84,7 | 27,0 | 79,4 | - | - | 20° | 4 x 10,2 |
| | 31310203900 | DS: 2-2-479 | 1B | 114 | 69,9 | - | 35,0 | 84,7 | 27,0 | 95,3 | - | - | 20° | 4 x 11,3 |
| | 31310204300 | HS: 3102-1359 | 2D | 100 | 57,0 | - | 53,0 | 84,7 | 27,0 | 84,0 | - | - | 30° | 6 x 8,2 |
| 1310 | 31310204700 | - | 2E | 100 | 57,0 | - | 53,0 | 84,7 | 27,0 | 84,0 | - | - | 30° | 8 x 8,2 |
| | 31310205100 | HS: 3102-9068 | 2D | 90 | 47,0 | - | 50,0 | 84,7 | 27,0 | 74,5 | - | - | 30° | 6 x 8,2 |
| | 31310205200 | - | 2D | 90 | 47,0 | - | 50,0 | 84,7 | 27,0 | 74,5 | - | - | 30° | 6 x 10,2 |
| | 31310205300 | - | 1B | 96 | 60,3 | - | 41,4 | 84,7 | 27,0 | 79,4 | - | - | 30° | 4 x 10,2 |
| | 31310205400 | - | 2C | 125,4 | 79,4 | - | 55,0 | 84,7 | 27,0 | 107,95 | - | - | 30° | 4 x 11,5 |
| | 31310205500 | - | 2E | 120 | 75,0 | - | 52,0 | 84,7 | 27,0 | 101,5 | - | - | 25° | 8 x 10,2 |
| | 31310205600 | - | 1A | 90 | 42,0 | - | 50,0 | 84,7 | 27,0 | - | 60,0 | 35,0 | 30° | 4 x 8,2 |
| | 31310206000 | - | 1A | 120 | 40,0 | 17,0 | 43,0 | 84,7 | 27,0 | - | 83,2 | 48,0 | 20° | 4 x 12,3 |
| | 31310206100 | - | 1A | 120 | 56,0 | 41,5 | 43,0 | 84,7 | 27,0 | - | 83,2 | 48,0 | 20° | 4 x 12,3 |
| | 31310206200 | - | 2E | 120 | 75,0 | - | 52,0 | 84,7 | 27,0 | - | - | - | 25° | 8 x 8,1 |
| | 31310206800 | - | 1A | 97 | 45,0 | - | 44,5 | 84,7 | 27,0 | - | 60,8 | 51,0 | 27° | 4 x 10,3 |
| | 31310207100 | - | 1B | 115 | 69,9 | - | 35,0 | 84,7 | 27,0 | 95,3 | - | - | 20° | 4 x 12,2 |
| | 31310207500 | - | 2C | 100 | 57,0 | - | 53,0 | 84,7 | 27,0 | 84,0 | - | - | 30° | 4 x 8,2 |
| | 31310207700 | - | 2C | 90 | 47,0 | 36,0 | 50,0 | 84,7 | 27,0 | 74,5 | - | - | 30° | 4 x 8,2 |
| | 31310208200 | - | 1A | 105 | 65,0 | - | 41,4 | 84,7 | 27,0 | 85,0 | 68,77 | 49,96 | 30° | 4 x 8,2 |
| | 31310208500 | - | 1A | 109,5 | 56,0 | 37,0 | 42,0 | 84,7 | 27,0 | - | 67,03 | 60,03 | 20° | 4 x 10,4 |

**ß°** - MAX. ANGULAR MOVEMENT / MAX. BEUGEWINKEL / MAX. ÇALIŞMA AÇISI

## 6 FLANGE YOKES / GABELFLANSCHE / FLANŞLI ÇATALLAR

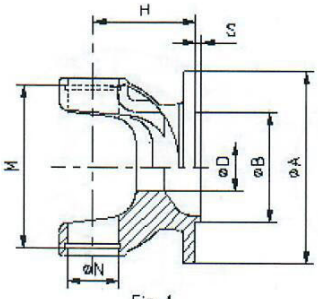

Fig. 1

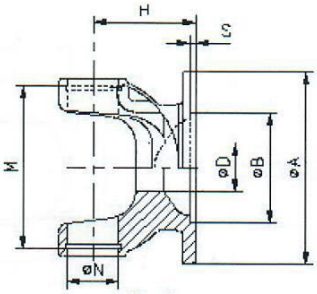

Fig. 2

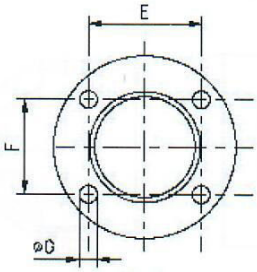

Fig. A

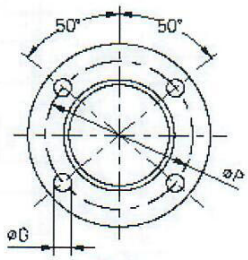

Fig. B

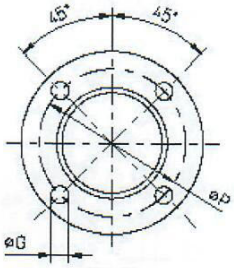

Fig. C

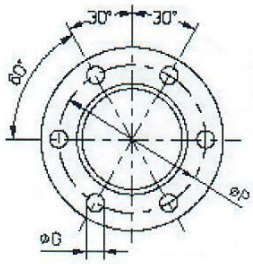

Fig. D

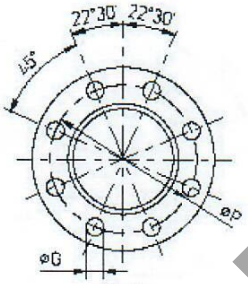

Fig. E

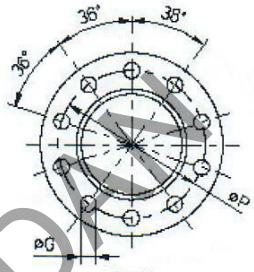

Fig. F

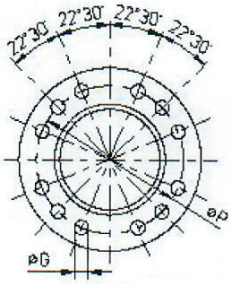

Fig. G

**KAT-02/2** **05/12/2008**

| SERIE BAUGR SERİ | NEW PART NO TEIL NR NEU PARÇA NO | REF. | FIG. | A | B | D | H | M | N | P | E | F | ß° | NO.OF HOLES x G LOCHANZAHL x G DELİK ADEDİ x G |
|---|---|---|---|---|---|---|---|---|---|---|---|---|---|---|
| 1410 | 31410200100HS:4102-159/DS:3-2-1591B | | 1B | 114 | 69,9 | - | 43,0 | 109,2 | 30,1 | 95,3 | - | - | 20° | 4 x11,3 |
| | 31410200200 | - | 1B | 114 | 69,9 | - | 43,0 | 109,2 | 30,1 | 95,3 | - | - | 20° | 4 x12,4 |
| | 31410201100 | HS: 4102-1199 | 2E | 120 | 75,0 | - | 56,0 | 109,2 | 30,1 | 101,5 | - | - | 25° | 8 x10,2 |
| | 31410201200 | - | 1A | 120 | 80,0 | - | 55,0 | 109,2 | 30,1 | - | 80,9 | 58,78 | 25° | 4 x10,3 |
| | 31410201800 | DS: 3-2-429 | 1B | 146 | 95,3 | - | 50,8 | 109,2 | 30,1 | 120,6 | - | - | 30° | 4 x 12,9 |
| | 31410201900 | - | 1D | 120 | 82,5 | - | 54,0 | 109,2 | 30,1 | 101,6 | - | - | 20° | 6 x 10,2 |
| | 31410202200 | HS: 4102-1189 | 2E | 120 | 75,0 | - | 56,0 | 109,2 | 30,1 | 101,5 | - | - | 25° | 8 x 8,2 |
| | 31410202300 | - | 1B | 114 | 69,9 | - | 43,0 | 109,2 | 30,1 | 95,3 | - | - | 20° | 4 x 12,2 |
| | 31410203100 | CHRS:37315-1226A | 1A | 138 | 70,0 | - | 42,0 | 109,2 | 30,1 | - | 84,100 | 78,430 | 20° | 4 x 12,2 |
| | 31410203700 | - | 1B | 120 | 70,0 | - | 55,0 | 109,2 | 30,1 | 100,0 | - | - | 25° | 4 x 12,2 |
| | 31410203900 | - | 1A | 120 | 80,0 | - | 55,0 | 109,2 | 30,1 | - | 80,9 | 58,78 | 25° | 4 x 12,2 |
| | 31410204000 | - | 1B | 146 | 95,3 | - | 50,8 | 109,2 | 30,1 | 120,6 | - | - | 30° | 4 x 14,2 |
| | 31410204100 | - | 1B | 114 | 60,0 | - | 43,0 | 109,2 | 30,1 | 90,0 | - | - | 20° | 4 x 10,3 |
| | 31410204300 | - | 2D | 100 | 57,0 | - | 70,0 | 109,2 | 30,1 | 84,0 | - | - | 35° | 6 x 8,2 |
| 1480 | 31480200100 | DS: 3-2-479 | 1B | 146 | 95,2 | - | 50,8 | 109,2 | 34,9 | 120,7 | - | - | 22° | 4 x 12,9 |
| | 31480200300 | - | 1B | 146 | 95,2 | - | 50,8 | 109,2 | 34,9 | 120,7 | - | - | 22° | 4 x 14,3 |
| | 31480200700 | - | 1A | 120 | 80,0 | - | 65,0 | 109,2 | 34,9 | - | 80,90 | 58,78 | 24° | 4 x 12,3 |
| | 31480200800 | - | 1B | 120 | 70,0 | - | 65,0 | 109,2 | 34,9 | 100,0 | - | - | 24° | 4 x 12,2 |
| | 31480200900 | - | 2E | 120 | 75,0 | - | 65,0 | 109,2 | 34,9 | 101,5 | - | - | 24° | 8 x 10,2 |
| | 31480201200 | - | 1A | 135 | 80,0 | - | 62,0 | 109,2 | 34,9 | - | 95,26 | 55,00 | 27° | 4 x 12,3 |
| | 31480201300 | - | 1B | 146 | 68,0 | - | 62,0 | 109,2 | 34,9 | 122,0 | - | - | 27° | 4 x 13,1 |
| | 31480201900 | - | 1B | 116 | 69,8 | - | 65,0 | 109,2 | 34,9 | 95,3 | - | - | 24° | 4 x 12,2 |
| | 31480202200 | - | 2E | 120 | 75,0 | - | 78,0 | 109,2 | 34,9 | 101,5 | - | - | 30° | 8x 10,2 |
| | 31480202500 | - | 2E | 120 | 75,0 | - | 66,5 | 109,2 | 34,9 | 101,6 | - | - | 30° | 8 x 10,2 |
| | 31480202600 | - | 2E | 120 | 75,0 | - | 75,0 | 109,2 | 34,9 | 101,5 | - | - | 30° | 8 x 10,2 |
| 1510 | 31510200200 | - | 1B | 146 | 95,2 | - | 63,5 | 119,3 | 39,6 | 120,7 | - | - | 25° | 4 x 14,4 |
| | 31510200800 | HS: 5102-639 | 1E | 130 | 82,5 | - | 75,0 | 119,3 | 39,6 | 112,0 | - | - | 25° | 8 x 10,2 |
| | 31510200900 | - | 1D | 120 | 82,5 | - | 75,0 | 119,3 | 39,6 | 101,6 | - | - | 25° | 6 x 10,2 |
| | 31510201100 | HS: 5102-239 | 1B | 146 | 95,2 | - | 63,5 | 119,3 | 39,6 | 120,7 | - | - | 25° | 4 x 12,9 |
| | 31510201200 | HS: 5102-649 | 2E | 150 | 90,0 | - | 90,0 | 119,3 | 39,6 | 130,0 | - | - | 30° | 8 x 12,2 |
| | 31510201300 | - | 2E | 165 | 95,0 | - | 90,0 | 119,3 | 39,6 | 140,0 | - | - | 30° | 8 x 16,2 |
| | 31510202000 | HS: 5102-609 | 2E | 120 | 75,0 | - | 75,0 | 119,3 | 39,6 | 101,5 | - | - | 25° | 8 x 10,2 |
| | 31510202800 | HS: 5102-629 | 2E | 150 | 90,0 | - | 90,0 | 119,3 | 39,6 | 130,0 | - | - | 30° | 8 x 10,2 |
| | 31510203100 | - | 1B | 146 | 95,2 | - | 63,5 | 119,3 | 39,6 | 120,7 | - | - | 25° | 4 x 14,2 |
| | 31510203200 | HS: 5102-619 | 2E | 120 | 75,0 | - | 75,0 | 119,3 | 39,6 | 101,5 | - | - | 25° | 8 x 8,2 |
| | 31510203300 | - | 2E | 150 | 90,0 | - | 82,5 | 119,3 | 39,6 | 130,0 | - | - | 35° | 8 x 12,2 |
| | 31510204400 | - | 2E | 120 | 75,0 | 40 | 75,0 | 119,3 | 39,6 | 101,5 | - | - | 25° | 8 x 8,2 |
| | 31510204500 | - | 1A | 133 | 80,0 | - | 75,0 | 119,3 | 39,6 | - | 95,26 | 55,00 | 25° | 4 x 12,3 |
| 1630 | 31630200100 | BRD: 63/202230 | 1E | 175 | 168,2 | - | 80,5 | 119,3 | 39,6 | 155,6 | - | - | 35° | 8 x 9,8 |

ß° - MAX. ANGULAR MOVEMENT / MAX. BEUGEWINKEL / MAX. ÇALIŞMA AÇISI

## FLANGE YOKES / GABELFLANSCHE / FLANŞLI ÇATALLAR



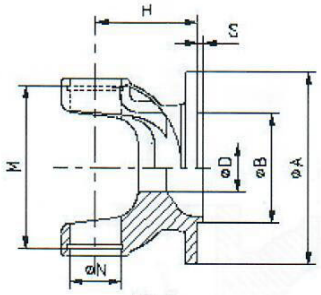

Fig. 1

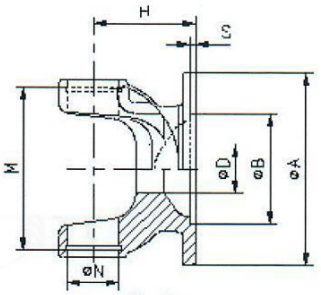

Fig. 2

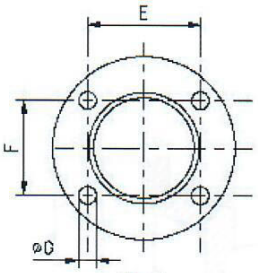

Fig. A

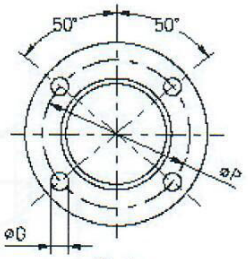

Fig. B

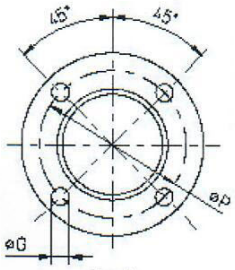

Fig C

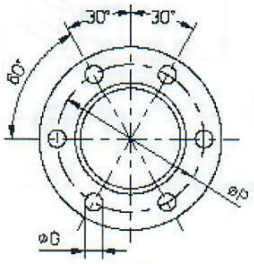

Fig D

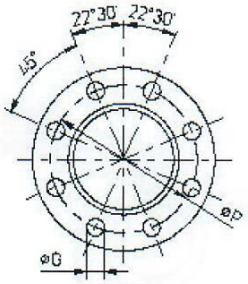

Fig E

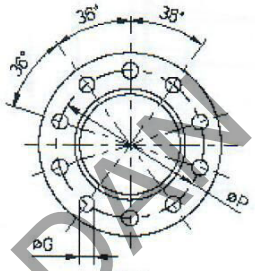

Fig F

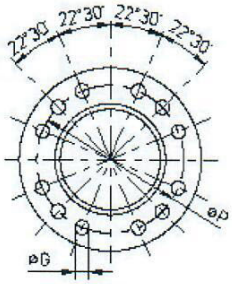

Fig G

**KAT-02/3** **05/12/2008**

| SERIE BAUGR SERİ | NEW PART NO TEIL NR NEU PARÇA NO | REF. | FIG. | A | B | D | H | M | N | P | E | F | ß° | NO.OF HOLES x G LOCHANZAHL x G DELİK ADEDİ x G |
|---|---|---|---|---|---|---|---|---|---|---|---|---|---|---|
| 287 | 32870200100 | - | 2D | 100 | 57,0 | 40 | 58,0 | 85,1 | 30,0 | 84,0 | - | - | 35° | 6 x 8,2 |
| | 32870200200 | - | 2E | 100 | 57,0 | 40 | 58,0 | 85,1 | 30,0 | 84,0 | - | - | 35° | 8 x 8,2 |
| | 32870200400 | - | 2E | 120 | 75,0 | 40 | 54,0 | 85,1 | 30,0 | 101,5 | - | - | 30° | 8 x 8,2 |
| 385 | 33850200300 | - | 2E | 165 | 95,0 | - | 82,5 | 129,2 | 48,0 | 140,0 | - | - | 32° | 8 x 16,2 |
| | 33850200700 | MB: 3854111711 | 2E | 150 | 90,0 | - | 75,0 | 129,2 | 48,0 | 130,0 | - | - | 24° | 8 x 12,2 |
| | 33850200900 | - | 1E | 175 | 168,2 | - | 80,5 | 129,2 | 48,0 | 155,6 | - | - | 32° | 8 x 9,8 |
| | 33850201000 | - | 2E | 180 | 110,0 | - | 82,5 | 129,2 | 48,0 | 155,5 | - | - | 32° | 8 x 14,2 |
| | 33850201200 | - | 1A | 175 | 90,0 | - | 82,5 | 129,2 | 48,0 | - | 122,0 | 83,0 | 32° | 4 x 14,1 |
| | 33850201300 | - | 2E | 150 | 90,0 | - | 82,5 | 129,2 | 48,0 | 130,0 | - | - | 32° | 8 x 12,2 |
| | 33850201500 | - | 2F | 180 | 110,0 | - | 82,5 | 129,2 | 48,0 | 155,5 | - | - | 32° | 10 x 16,2 |
| | 33850201800 | - | 2C | 165 | 110,0 | - | 82,5 | 129,2 | 48,0 | 140,0 | - | - | 32° | 4 x 12,9 |
| | 33850202000 | - | 2E | 180 | 110,0 | - | 82,5 | 129,2 | 48,0 | 155,5 | - | - | 32° | 8 x 12,2 |
| 389 | 33890200500 | - | 2E | 180 | 110,0 | - | 90,0 | 139,0 | 53,0 | 155,5 | - | - | 30° | 8 x 14,2 |
| | 33890200900 | - | 1G | 203 | 196,8 | - | 78,0 | 139,0 | 53,0 | 184,1 | - | - | 25° | 12 x 11,3 |
| 395 | 33950200100 | - | 2F | 180 | 110,0 | - | 95,0 | 155,9 | 57,0 | 155,5 | - | - | 24° | 10 x 16,2 |
| | 33950200500 | - | 2E | 180 | 110,0 | - | 95,0 | 155,9 | 57,0 | 155,5 | - | - | 24° | 8 x 14,2 |
| | 33950200700 | - | 2F | 180 | 110,0 | - | 115,0 | 155,9 | 57,0 | 155,5 | - | - | 35° | 10 x 16,2 |
| 420 | 34200200100 | - | 1B | 114 | 69,8 | - | 40,0 | 84,7 | 30,2 | 95,3 | - | - | 25° | 4 x 12,4 |
| | 34200200200 | - | 1B | 114 | 60,0 | - | 40,0 | 84,7 | 30,2 | 90,0 | - | - | 25° | 4 x 10,3 |
| | 34200200300 | - | 1B | 114 | 69,8 | - | 40,0 | 84,7 | 30,2 | 95,3 | - | - | 25° | 4 x 11,3 |
| | 34200200500 | - | 2C | 129 | 17,0 | 17 | 45,0 | 84,7 | 30,2 | 107,95 | - | - | 15° | 4 x 12,8 |
| | 34200200600 | - | 2C | 129 | 50,8 | 34 | 45,0 | 84,7 | 30,2 | 107,95 | - | - | 15° | 4 x 12,8 |
| | 34200200700 | - | 2E | 120 | 75,0 | 40 | 54,0 | 84,7 | 30,2 | 101,5 | - | - | 30° | 8 x 10,2 |
| | 34200201100 | - | 1C | 100 | 60,3 | 40 | 58,0 | 84,7 | 30,2 | 79,4 | - | - | 35° | 4 x 10,2 |
| | 34200201200 | - | 2D | 100 | 57,0 | 40 | 58,0 | 84,7 | 30,2 | 84,0 | - | - | 35° | 6 x 8,2 |
| | 34200201500 | - | 1C | 116 | 69,8 | - | 53,0 | 84,7 | 30,2 | 95,3 | - | - | 30° | 4 x 12,4 |
| | 34200202100 | - | 2C | 120 | 57,0 | - | 52,0 | 84,7 | 30,2 | 101,5 | - | - | 25° | 4 x 10,2 |
| 424 | 34240200100 | - | 2E | 120 | 75,0 | - | 70,0 | 100,1 | 35,0 | 101,5 | - | - | 35° | 8 x 8,2 |
| | 34240200200 | - | 2E | 120 | 75,0 | - | 70,0 | 100,1 | 35,0 | 101,5 | - | - | 35° | 8 x 10,2 |
| 432 | 34320200100 | 5 687 35 27 00 060 | 2E | 150 | 90,0 | - | 95,0 | 123 | 42,0 | 130 | - | - | 44° | 8 x 12,1 |
| | 34320200200 | 2 687 35 28 00 100 | 2E | 180 | 110 | - | 90,0 | 123 | 42,0 | 155,5 | - | - | 35° | 8 x 14,2 |
| | 34320200300 | 2 687 35 24 00 030 | 1E | 174,6 | 168,23 | - | 88,0 | 123 | 42,0 | 155,5 | - | - | 35° | 8 x 10,2 |
| | 34320200400 | 2 687 35 24 00 040 | 1E | 174,6 | 168,23 | - | 88,0 | 123 | 42,0 | 155,5 | - | - | 35° | 8 x 9,6 |
| 434 | 34340200300 | - | 2E | 165 | 95,0 | - | 87,0 | 137,0 | 52,0 | 140,0 | - | - | 38° | 8 x 16,2 |
| | 34340200800 | - | 2F | 180 | 110,0 | - | 90,0 | 137,0 | 52,0 | 155,5 | - | - | 30° | 10 x 16,2 |
| | 34340200900 | - | 2E | 180 | 110,0 | - | 90,0 | 137,0 | 52,0 | 155,5 | - | - | 30° | 8 x 14,2 |
| | 34340201000 | - | 1G | 203,2 | 196,8 | - | 78,0 | 137,0 | 52,0 | 184,1 | - | - | 25° | 12 x 11,3 |
| 445 | 34450200400 | 2 687 45 20 00 000 | 2F | 180 | 110,0 | - | 95,0 | 151,0 | 52,0 | 155,5 | - | - | 25° | 10 x 16,2 |
| | 34450200500 | 2 687 45 20 00 070 | 2E | 180 | 110,0 | - | 95,0 | 151,0 | 52,0 | 155,5 | - | - | 25° | 8 x 16,2 |
| | 34450200600 | 2 687 45 20 00 060 | 2E | 180 | 110,0 | - | 95,0 | 151,0 | 52,0 | 155,5 | - | - | 25° | 8 x 14,2 |
| | 34450200700 | 2 687 45 27 00 060 | 2E | 165 | 95,0 | - | 112,0 | 151,0 | 52,0 | 140,0 | - | - | 44° | 8 x 16,2 |
| | 34450200800 | 2 687 45 24 00 090 | 1G | 203,2 | 196,8 | - | 86,0 | 151,0 | 52,0 | 184,1 | - | - | 25° | 12 x 10,2 |
| | 34450200900 | 2 687 45 24 00 100 | 1G | 203,2 | 196,8 | - | 86,0 | 151,0 | 52,0 | 184,1 | - | - | 25° | 12 x 11,3 |
| | 34450201000 | 2 687 45 24 00 110 | 1G | 203,2 | 196,8 | - | 86,0 | 151,0 | 52,0 | 184,1 | - | - | 25° | 12 x 9,7 |

**ß°** - MAX. ANGULAR MOVEMENT / MAX. BEUGEWINKEL / MAX. ÇALIŞMA AÇISI

DIMENSIONS AND ILLUSTRATIONS ARE SUBJECT TO CHANGE, AND WE RESERVE THE RIGHT TO INTRODUCE MODIFICATIONS WITHOUT PRIOR NOTICE.
DIE MASSE UND ZEICHNUNGEN SIND UNIVERBINDLICH UND KÖNNEN OHNE VORHERIGE BEKANTGABE GEAENDERT WERDEN.
ÖLÇÜ VE RESİMLER BAĞLAYICI OLMAYIP , BİLDİRİLMEKSİZİN DEĞİŞTİRİLEBİLİRLER.

## 8 FLANGE YOKES / GABELFLANSCHE / FLANŞLI ÇATALLAR

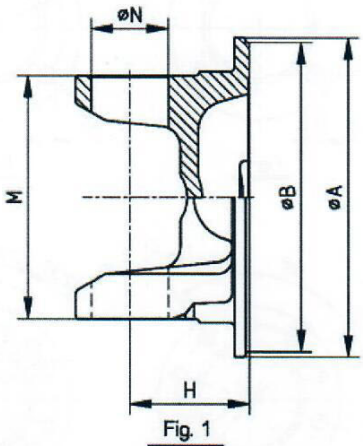

Fig. 1

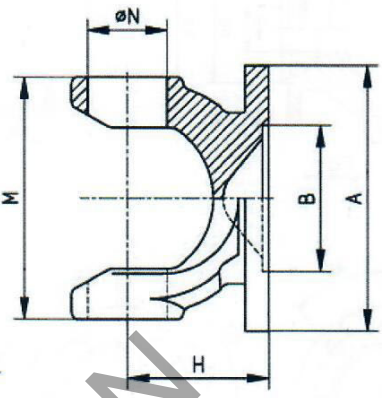

Fig. 2

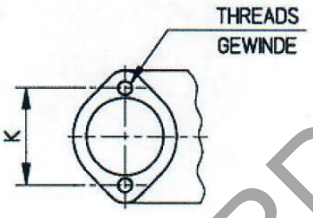


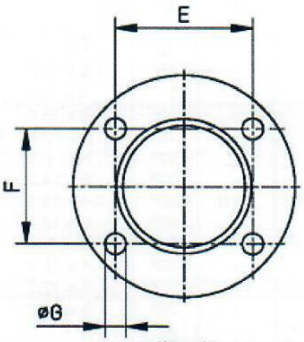

Fig. A

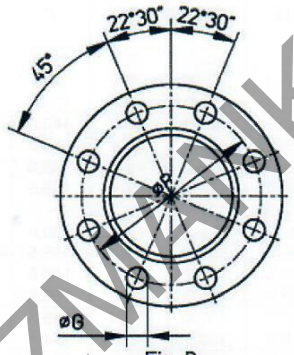

Fig. B

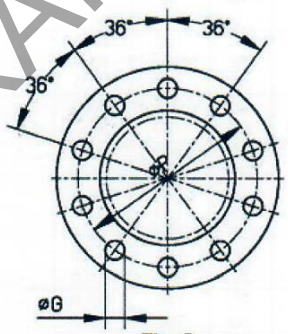

Fig. C

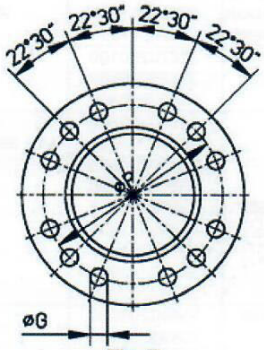

Fig. D



KAT-02/4 — 05/12/2008

| SERIE BAUGR SERİ | NEW PART NO TEIL NR NEU PARÇA NO | REF. | FIG. | A | B | H | K | M | N | P | E | F | ß° | NO.OF HOLES x G LOCHANZAHL x G DELİK ADEDİ x G | THREADS GEWINDE VİDA |
|---|---|---|---|---|---|---|---|---|---|---|---|---|---|---|---|
| 1600 | 31600200600 | HS: 6002-569 | 2B | 150 | 90,0 | 87,0 | 58,7 | 134,9 | 47,6 | 130,0 | - | - | 33° | 8 x 12,2 | 5/16"BSF |
| | 31600200700 | DS: 5-2-279 | 2B | 175 | 168,2 | 69,8 | 58,7 | 134,9 | 47,6 | 155,6 | - | - | 22° | 8 x 9,8 | 5/16"UNF |
| | 31600201100 | DS: N5-2-709 | 1B | 203 | 163,4 | 69,8 | 58,7 | 134,9 | 47,6 | 184,1 | - | - | 22° | 8 x 9,8 | 5/16"UNF |
| 1700 | 31700201100 | HS:7002-319 | 2B | 203 | 196,8 | 76,2 | 60,4 | 154,7 | 49,2 | 184,1 | - | - | 33° | 8 x 9,8 | 5/16"BSF |
| | 31700201101 | - | 2B | 203 | 196,8 | 76,2 | 60,4 | 154,7 | 49,2 | 184,1 | - | - | 33° | 8 x 10,2 | M8x1,25 |
| | 31700203500 | - | 1B | 165 | 95,0 | 98,0 | 60,4 | 154,7 | 49,2 | 140,0 | - | - | 33° | 8 x 16,2 | 5/16"BSF |
| | 31700203600 | - | 2D | 203 | 196,8 | 76,2 | 60,4 | 154,7 | 49,2 | 184,1 | - | - | 33° | 12 x 11,3 | 5/16"BSF |
| | 31700203900 | HS: 7002-5099 | 2B | 175 | 168,2 | 98,0 | 60,4 | 154,7 | 49,2 | 155,6 | - | - | 33° | 8 x 9,8 | 5/16"BSF |
| | 31700204400 | DS: 6-2-739 | 2B | 203 | 196,8 | 76,2 | 61,9 | 154,7 | 49,2 | 184,1 | - | - | 33° | 8 x 11,3 | 3/8" UNF |
| | 31700204500 | DS: 6-2-749 | 2B | 203 | 196,8 | 76,2 | 61,9 | 154,7 | 49,2 | 184,1 | - | - | 33° | 8 x 9,8 | 3/8" UNF |
| | 31700204800 | - | 1B | 203 | 163,5 | 74,5 | 61,9 | 154,7 | 49,2 | 184,1 | - | - | 33° | 8 x 9,8 | 3/8" UNF |
| 1800 | 31800200800 | - | 1C | 180 | 110,0 | 102,5 | 71,5 | 167,4 | 59,0 | 155,5 | - | - | 30° | 10 x 16,2 | 3/8" BSF |
| | 31800200900 | HS:8002-089/DS:6.5-2-79 | 2D | 203 | 196,8 | 86,0 | 71,5 | 167,4 | 59,0 | 184,1 | - | - | 24° | 12 x 11,3 | 3/8" BSF |
| 1820 | 31820200100 | DS: 6.5-2-329 | 2D | 203 | 196,8 | 85,7 | 61,9 | 191,7 | 49,2 | 184,1 | - | - | 30° | 12 x 11,3 | 3/8" UNF |

**ß°** - MAX. ANGULAR MOVEMENT / MAX. BEUGEWINKEL / MAX. ÇALIŞMA AÇISI

DIMENSIONS AND ILLUSTRATIONS ARE SUBJECT TO CHANGE, AND WE RESERVE THE RIGHT TO INTRODUCE MODIFICATIONS WITHOUT PRIOR NOTICE.
DIE MASSE UND ZEICHNUNGEN SIND UNIVERBINDLICH UND KÖNNEN OHNE VORHERIGE BEKANTGABE GEAENDERT WERDEN.
ÖLÇÜ VE RESİMLER BAĞLAYICI OLMAYIP , BİLDİRİLMEKSİZİN DEĞİŞTİRİLEBİLİRLER.

## FLANGE YOKES / GABELFLANSCHE / FLANŞLI ÇATALLAR
## ( WITH CROSS-TOOTH SERRATION / MIT KREUZVERZAHNUNG / ÇAPRAZ DİŞLİ )



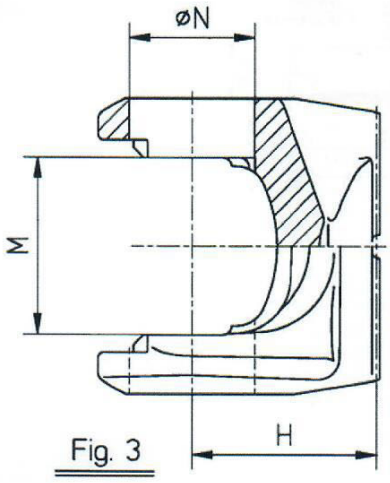


Fig. 3

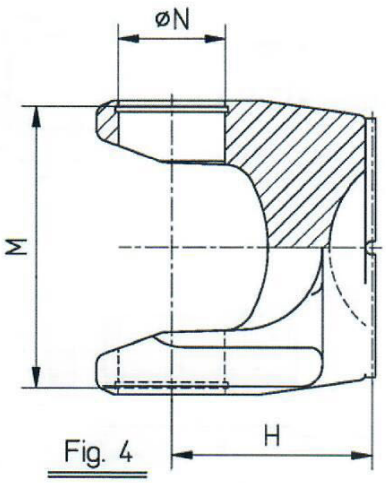


Fig. 4

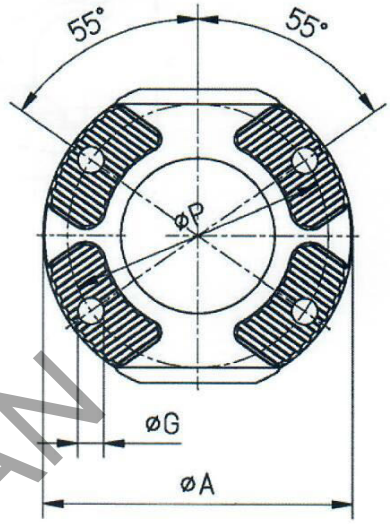




**KAT-02XS** **15/12/2008**

| SERIE BAUGR SERİ | PART NO TEIL NR PARÇA NO | REF. | FIG. | A | H | N | M | P | ß° | NO.OF HOLES x G LOCHANZAHL x G DELİK ADEDİ x G |
|---|---|---|---|---|---|---|---|---|---|---|
| 000 | 30000201101 | --- | 4 | 152 | 85,0 | 48,0 | 135,0 | 130,0 | 35° | 4 x 13,1 |
| 148 | 31480201600 | --- | 4 | 120 | 63,5 | 34,9 | 109,2 | 100,0 | 25° | 4 x 11,1 |
| | 31480202400 | --- | 4 | 120 | 75,0 | 34,9 | 109,2 | 100,0 | 30° | 4 x 11,1 |
| 163 | 31630200901 | --- | 4 | 120 | 70,0 | 39,6 | 119,3 | 100,0 | 30° | 4 x 11,1 |
| 381 | 33810200100 | MB: A 971 411 00 11 | 4 | 120 | 70,0 | 42,0 | 109,4 | 100,0 | 25° | 4 x 11,1 |
| | 33810200200 | --- | 4 | 120 | 65,0 | 42,0 | 107,7 | 100,0 | 18° | 4 x 11,1 |
| | 33810200300 | --- | 4 | 120 | 52,5 | 42,0 | 107,7 | 100,0 | 10° | 4 x 11,1 |
| 385 | 33850201700 | --- | 4 | 180 | 90,0 | 48,0 | 129 | 150,0 | 35° | 4 x 15,1 |
| | 33850202100 | MB: A 650 411 04 11 | 4 | 150 | 75,0 | 48,0 | 129 | 130,0 | 25° | 4 x 13,1 |
| 389 | 33890200700 | --- | 4 | 180 | 92,5 | 53,0 | 139,0 | 150,0 | 30° | 4 x 15,1 |
| | 33890200800 | --- | 4 | 150 | 100,0 | 53,0 | 139,0 | 130,0 | 44° | 4 x 13,1 |
| | 33890201000 | MB: A 389 411 04 11 | 4 | 165 | 97,0 | 53,0 | 139,0 | 140,0 | 36° | 4 x 13,1 |
| | 33890201400 | MB: A 654 411 03 11 | 4 | 150 | 85,0 | 53,0 | 139,0 | 130,0 | 30° | 4 x 13,1 |
| | 33890201500 | --- | 4 | 150 | 82,0 | 53,0 | 139,0 | 130,0 | 23° | 4 x 13,1 |
| | 33890201600 | --- | 4 | 180 | 84,5 | 53,0 | 139,0 | 150,0 | 23° | 4 x 15,1 |
| 395 | 33950200300 | --- | 4 | 180 | 95,0 | 57,0 | 156 | 150,0 | 30° | 4 x 15,1 |
| 434 | 34340200500 | --- | 4 | 165 | 97,0 | 52,0 | 137,0 | 140,0 | 36° | 4 x 13,1 |
| | 34340200600 | --- | 4 | 150 | 85,0 | 52,0 | 137,0 | 130,0 | 27° | 4 x 13,1 |
| | 34340200700 | --- | 4 | 180 | 92,5 | 52,0 | 137,0 | 150,0 | 32° | 4 x 15,1 |
| 445 | 34450200100 | GWB: 2687452000500 | 4 | 180 | 87,0 | 52,0 | 151,2 | 150,0 | 30° | 4 x 15,1 |
| | 34450201100 | --- | 4 | 150 | 87,0 | 52,0 | 151,2 | 130,0 | 30° | 4 x 13,1 |
| 446 | 34460200100 | --- | 4 | 180 | 87,0 | 53,0 | 151,2 | 150,0 | 30° | 4 x 15,1 |
| | 34460200200 | --- | 4 | 150 | 87,0 | 53,0 | 151,2 | 130,0 | 30° | 4 x 13,1 |
| 468 | 34680200100 | MB: A 656411 03 11 | 3 | 180 | 100,0 | 68,0 | 95,0 | 150,0 | 30° | 4 x 15,1 |

**ß°** - MAX. ANGULAR MOVEMENT / MAX. BEUGEWINKEL / MAX. ÇALIŞMA AÇISI

DIMENSIONS AND ILLUSTRATIONS ARE SUBJECT TO CHANGE, AND WE RESERVE THE RIGHT TO INTRODUCE MODIFICATIONS WITHOUT PRIOR NOTICE.

DIE MASSE UND ZEICHNUNGEN SIND UNIVERBINDLICH UND KÖNNEN OHNE VORHERIGE BEKANTGABE GEAENDERT WERDEN.

ÖLÇÜ VE RESİMLER BAĞLAYICI OLMAYIP , BİLDİRİLMEKSİZİN DEĞİŞTİRİLEBİLİRLER.

10

# SLEEVE & REVERSE SLEEVE YOKES / NABENMITNEHMER/ KAYICI VE TERS KAYICI ÇATALLAR

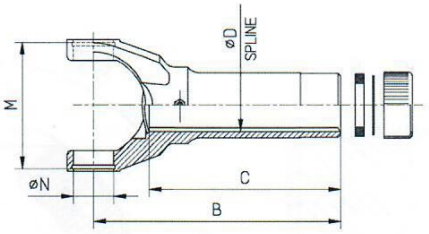


Fig. 1

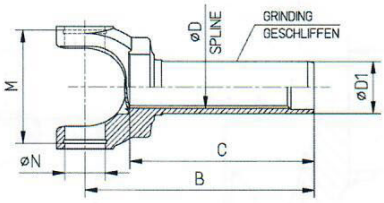


Fig. 2

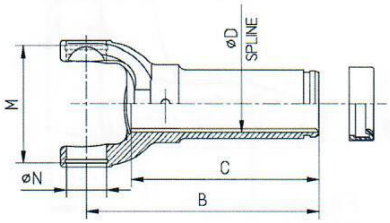


Fig. 3

**KAT-03/1** 15/12/2008

| SERIE BAUGR. SERİ | NEW PART NO TEIL NR NEU YENİ PARÇA NO | REF. | FIG. | ANGLE WINKEL AÇI | B | C | D1 | M | N | ß° | SPLINE DATA ZAHNPROFIL KANAL ÖLÇÜLERİ |
|---|---|---|---|---|---|---|---|---|---|---|---|
| 1140 | 31140300100 | HS: 1403-2488 | 2 | 14 | 135 | 99 | 30,1 | 64,2 | 23,8 | | D=22,8;S.P=24/48;Z=20 |
| | 41140300600 | HS: 1403-018/DS: 1-3-18KX | 1 | 17 | 110 | 88 | - | 64,2 | 23,8 | | SAE 1 1/16"x16C |
| | 31140301500 | HS: 1403-1778 | 2 | 20 | 149 | 120 | 34,9 | 64,2 | 23,8 | | T25;24/32;30° |
| | 31140303000 | HS: 1403-2418 | 2 | 14 | 135 | 99 | 30,1 | 64,2 | 23,8 | | D=22,2;M=1,25812;Z=16 |
| | 31140304400 | - | 2 | 20 | 149 | 122 | 32,9 | 64,2 | 23,8 | | SAE 1"x10C |
| | 41140304800 | - | 1 | 17 | 94 | 72 | - | 64,2 | 23,8 | | SAE 1 1/16"x16C |
| | 41140306200 | - | 1 | 30 | 129 | 91 | - | 64,2 | 23,8 | | SAE 1 1/16"x16C |
| | 31140306700 | - | 2 | 20 | 118 | 90 | 34,9 | 64,2 | 23,8 | | T25;24/32;30° |
| 1300 | 41300300200 | - | 3 | 20 | 141 | 118 | - | 77,5 | 27,0 | | SAE 1 3/8"x16C |
| | 41300300300 | - | 3 | 20 | 156 | 126 | - | 77,5 | 27,0 | | SAE 1 1/2"x16C |
| | 31300300400 | - | 2 | 15 | 154 | 127 | 32,9 | 77,5 | 27,0 | | SAE 1"x10C |
| | 31300300500 | HS: 3003-4798 | 2 | 15 | 154 | 124 | 34,9 | 77,5 | 27,0 | | T25;24/32;30° |
| | 41300300900 | HS: 3003-068 | 1 | 20 | 137 | 113 | - | 77,5 | 27,0 | | SAE 1 3/8"x16C |
| 1310 | 41310300600 | HS: 3103-128/DS: 2-3-128KX | 1 | 20 | 137 | 111 | - | 84,7 | 27,0 | | SAE 1 3/8"x16C |
| | 41310300800 | HS: 3103-3658 | 1 | 30 | 166 | 129 | - | 84,7 | 27,0 | | SAE 1 3/8"x16C |
| | 41310304600 | HS: 3103-3528 | 1 | 20 | 126 | 101 | - | 84,7 | 27,0 | | SAE 1 3/8"x16C |
| | 41310304800 | - | 1 | 20 | 104 | 79 | - | 84,7 | 27,0 | | SAE 1 3/8"x16C |
| | 31310307300 | DS: 2-3-9131X | 2 | 20 | 191 | 165 | 47,9 | 84,7 | 27,0 | | T31(32);24/32;30° |
| | 41310307500 | - | 3 | 20 | 137 | 111 | - | 84,7 | 27,0 | | SAE 1 3/8"x16C |
| | 41310307600 | - | 3 | 30 | 166 | 129 | - | 84,7 | 27,0 | | SAE 1 3/8"X16C |
| | 31310307700 | DS: 2-3-9161X | 2 | 20 | 191 | 165 | 47,9 | 84,7 | 27,0 | | T31(32);24/48;30° |
| | 31310308200 | - | 2 | 20 | 136 | 112 | 35,96 | 84,7 | 27,0 | | T23(24);24/48;30° |
| | 41310308300 | - | 3 | 20 | 166 | 130 | - | 84,7 | 27,0 | | SAE 1 1/2"x16C |
| | 31310308700 | - | 3 | 20 | 112 | 87 | - | 84,7 | 27,0 | | SAE 1 3/8"x16C |
| | 31310309400 | - | 3 | 20 | 96 | 71 | - | 84,7 | 27,0 | | SAE 1 3/8"x16C |
| | 31310309600 | - | 3 | 20 | 129 | 104 | - | 84,7 | 27,0 | | SAE 1 3/8"x16C |
| 1410 | 41410300200 | HS: 4103-118/DS: 3-3-118KX | 1 | 20 | 165 | 138 | - | 109,2 | 30,1 | | SAE 1 1/2"x16C |
| | 41410302500 | HS: 4103-458 | 1 | 30 | 193 | 160 | - | 109,2 | 30,1 | | SAE 1 1/2"x16C |
| | 41410304000 | HS: 4103-1028/DS: 3-3-468KX | 1 | 20 | 100 | 70 | - | 109,2 | 30,1 | | SAE 1 1/2"x16C |
| | 41410304800 | - | 1 | 20 | 124 | 94 | - | 109,2 | 30,1 | | SAE 1 1/2"x16C |
| | 41410305300 | - | 3 | 20 | 142 | 112 | - | 109,2 | 30,1 | | SAE 1 1/2"x16C |
| | 41410305600 | - | 3 | 20 | 168 | 138 | - | 109,2 | 30,1 | | SAE 1 1/2"x16C |
| | 41410306400 | - | 1 | 20 | 137 | 107 | - | 109,2 | 30,1 | | SAE 1 1/2"x16C |
| | 31410306500 | - | 2 | 30 | 108 | 79 | 50,0 | 109,2 | 30,1 | | SAE 1 3/8"X16C |
| 1480 | 41480300100 | - | 1 | 22 | 173 | 141 | - | 109,2 | 34,9 | 22 | SAE 1 3/4"x16C |
| | 41480300200 | DS: 3-3-1601KX | 1 | 22 | 173 | 141 | - | 109,2 | 34,9 | | SAE 1,562"X16C |
| | 41480300300 | - | 1 | 22 | 142 | 110 | - | 109,2 | 34,9 | | SAE 1 3/4"x16C |
| | 41480300400 | - | 1 | 22 | 120 | 78 | - | 109,2 | 34,9 | | SAE 1 3/4"x16C |
| | 41480300500 | - | 1 | 22 | 157 | 124 | - | 109,2 | 34,9 | | SAE 1 3/4"x16C |
| | 41480300900 | DS: 3-3-1601KX | 3 | 22 | 173 | 141 | - | 109,2 | 34,9 | 22 | SAE 1,562"X16C |
| 1510 | 41510300100 | HS: 5103- 538 | 1 | 20 | 170 | 126 | - | 119,3 | 39,6 | 25 | SAE 1 3/4"x16C |
| | 41510300300 | - | 1 | 20 | 135 | 91 | - | 119,3 | 39,6 | | SAE 1 3/4"x16C |
| | 41510304900 | - | 1 | 20 | 150 | 105 | - | 119,3 | 39,6 | | SAE 1 3/4"x16C |
| | 41510305500 | HS: 5103-381 | 1 | 30 | 195 | 135 | - | 119,3 | 39,6 | | SAE 1 3/4"x16C |
| | 31510306400 | HS: 5103-841 | 2 | 20 | 170 | 125 | 55,4 | 119,3 | 39,6 | | SAE 1 3/4"x16C |
| 1630 | 41630300500 | - | 1 | 35 | 267 | 207 | - | 119,3 | 39,6 | | SAE 2"x16C |

ß° - MAX. ANGULAR MOVEMENT / MAX. BEUGEWINKEL / MAX. ÇALIŞMA AÇISI

## SLEEVE YOKES / NABENMITNEHMER / KAYICI ÇATALLAR



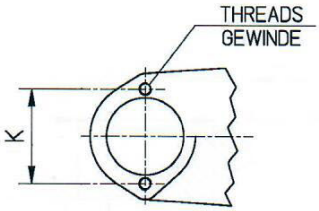


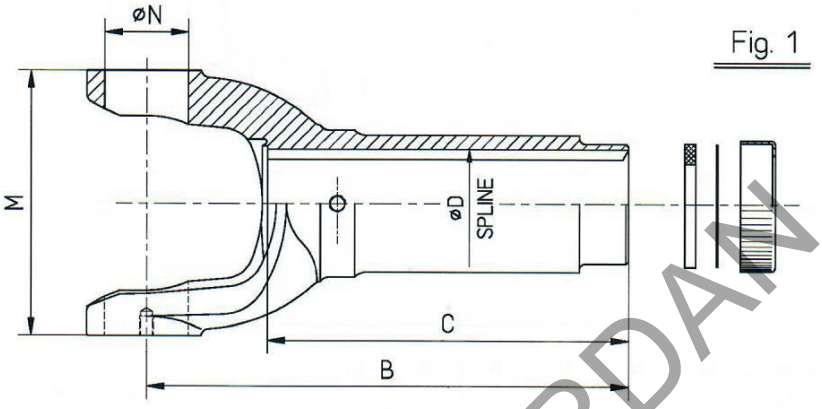


Fig. 1

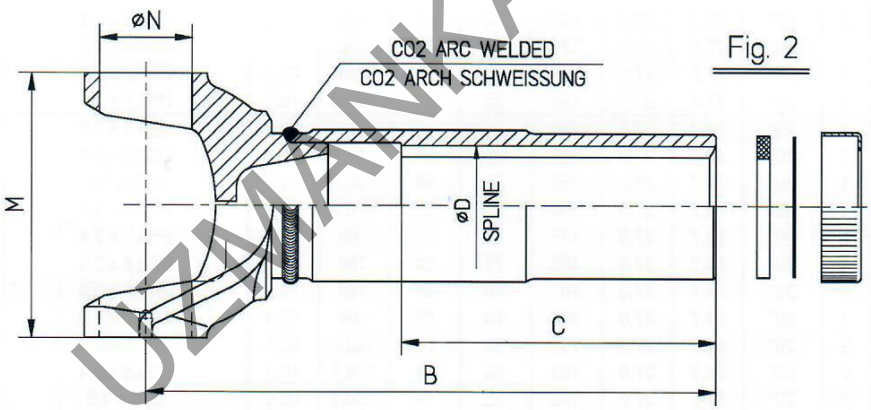


Fig. 2



**KAT-03/2** 15/12/2008

| SERIE BAUGR. SERİ | NEW PART NO TEIL NR NEU YENİ PARÇA NO | REF. | FIG. | ANGLE WINKEL AÇI | B | C | K | M | N | ß° | SPLINE DATA ZAHNPROFIL KANAL ÖLÇÜLERİ | THREADS GEWINDE VİDA |
|---|---|---|---|---|---|---|---|---|---|---|---|---|
| 1600 | 41600301000 | DS: 5-3-288 | 1 | 30 | 237 | 170 | 58,7 | 134,9 | 47,6 | | SAE 2"x16C | 5/16"UNF |
| | 41600301400 | DS: 5-3-1411 | 1 | 27 | 262 | 194 | 58,7 | 134,9 | 47,6 | | SAE 1 1/16"x16C | 5/16"UNF |
| | 41600301800 | DS: 5-3-2141 | 1 | 45 | 303 | 221 | 58,7 | 134,9 | 47,6 | | SAE 2"x16C | 5/16"UNF |
| | 41600302200 | DS: 5-3-2261 | 1 | 35 | 275 | 207 | 58,7 | 134,9 | 47,6 | | SAE 2"x16C | 5/16"UNF |
| | 41600302300 | - | 1 | 45 | 303 | 221 | 58,7 | 134,9 | 47,6 | | SAE 2"x16C | 5/16"BSF |
| 1700 | 41700300700 | HS: 7003-1008 | 1 | 33 | 283 | 213 | 60,4 | 154,7 | 49,2 | | SAE 2 1/2"x10C | 5/16"BSF |
| | 41700301500 | HS: 7003- 418 | 1 | 33 | 251 | 181 | 60,4 | 154,7 | 49,2 | | SAE 2 1/2"x10C | 5/16"BSF |
| | 31700302600* | SL200 | 1 | 33 | 283 | 210 | 60,4 | 154,7 | 49,2 | | N65x2,5x24 DIN5480 | 5/16"BSF |
| | 41700302900 | DS: 6-3-2671 | 1 | 22 | 244 | 200 | 61,9 | 154,7 | 49,2 | | SAE 2 1/2"x16C | 3/8" UNF |
| | 41700303300 | DS: 6-3-2651 | 1 | 30 | 297 | 235 | 61,9 | 154,7 | 49,2 | | SAE 2 1/2"x16C | 3/8" UNF |
| | 41700303800 | DS: 6-3-1501KX | 1 | 30 | 297 | 235 | 61,9 | 154,7 | 49,2 | | SAE 2 1/2"x10C | 3/8" UNF |
| | 41700303900 | DS: 6-3-1541KX | 1 | 22 | 244 | 200 | 61,9 | 154,7 | 49,2 | | SAE 2 1/2"x10C | 3/8" UNF |
| 1800 | 41800300100 | - | 2 | 30 | 322 | 196 | 71,5 | 167,4 | 59,0 | | SAE 3"x10C | 3/8" BSF |
| | 41800300200 | - | 2 | 30 | 363 | 200 | 71,5 | 167,4 | 59,0 | | SAE 3"x10C | 3/8" BSF |

ß° - MAX. ANGULAR MOVEMENT / MAX. BEUGEWINKEL / MAX. ÇALIŞMA AÇISI

## 12 SLEEVE YOKES ASSY / NABENMITNEHMER / KAYICI ÇATAL KOMPLELERI

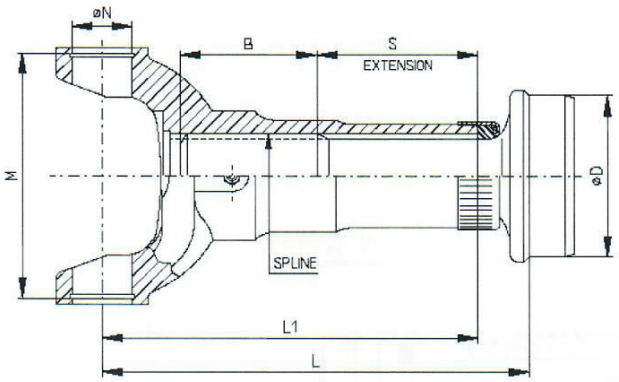


FİG. 1

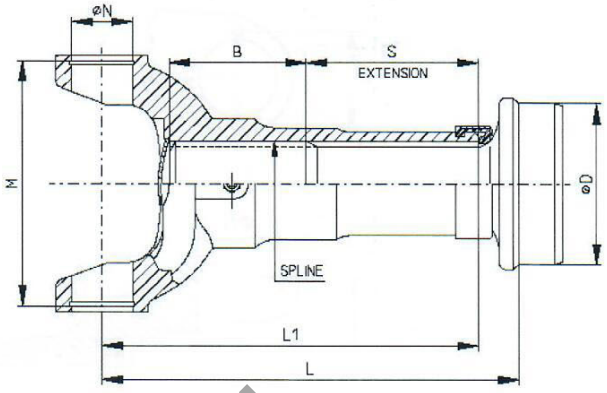


FİG. 2

KAT-03-K1 27.09.06

| SERIE BAUGR SERİ | NEW PART NO TEIL NR NEU YENİ PARÇA NO | FİG. | ANGLE WINKEL AÇI | M | N | L | S | B | L1 | D | TUBE O.D.xW.THICKNESS ROHRDURCHMESSERxDICKE BORU ÇAPIxET KALINLIĞI | SPLINE DATA ZAHNPROFIL KANAL ÖLÇÜLERI |
|---|---|---|---|---|---|---|---|---|---|---|---|---|
| 1140 | 41140300605 | 1 | 17° | 64,2 | 23,8 | 127 | 40 | 44 | 109,5 | 47,7 | Ø50,8 x 1,6 | SAE Ø27 x 16C |
| | 41140300606 | 1 | 17° | 64,2 | 23,8 | 127 | 40 | 44 | 109,5 | 46,2 | Ø50,8 x 2,4 | SAE Ø27 x 16C |
| | 41140300607 | 1 | 17° | 64,2 | 23,8 | 132 | 40 | 44 | 109,5 | 66,9 | Ø70 x 1,6 | SAE Ø27 x 16C |
| 1300 | 41300300301 | 2 | 20° | 77,5 | 27,0 | 177 | 50 | 61 | 156 | 44,1 | Ø52 x 4 | SAE Ø38,1 x 16C |
| | 41300300302 | 2 | 20° | 77,5 | 27,0 | 170 | 60 | 61 | 156 | 46,2 | Ø50,8 x 2,4 | SAE Ø38,1 x 16C |
| | 41300300303 | 2 | 20° | 77,5 | 27,0 | 177 | 57 | 61 | 156 | 73,3 | Ø76,2 x 1,6 | SAE Ø38,1 x 16C |
| | 41300300304 | 2 | 20° | 77,5 | 27,0 | 177 | 57 | 61 | 156 | 72,3 | Ø76,2 x 2,1 | SAE Ø38,1 x 16C |
| | 41300300901 | 1 | 20° | 77,5 | 27,0 | 156 | 55 | 54 | 136,6 | 46,2 | Ø50,8 x 2,4 | SAE Ø34,9 x 16 |
| 1310 | 41310300601 | 1 | 20° | 84,7 | 27,0 | 155 | 55 | 57 | 136,5 | 60,6 | Ø63,5 x 1,6 | SAE Ø34,9 x 16C |
| | 41310300602 | 1 | 20° | 84,7 | 27,0 | 155 | 55 | 54 | 136,5 | 46,2 | Ø50,8 x 2,4 | SAE Ø34,9 x 16C |
| | 41310300605 | 1 | 20° | 84,7 | 27,0 | 155 | 55 | 57 | 136,5 | 66,9 | Ø70 x 1,6 | SAE Ø34,9 x 16C |
| | 41310300606 | 1 | 20° | 84,7 | 27,0 | 155 | 55 | 57 | 136,5 | 73,3 | Ø76,2 x 1,6 | SAE Ø34,9 x 16C |
| | 41310300802 | 1 | 30° | 84,7 | 27,0 | 185 | 72 | 57 | 166 | 46,2 | Ø50,8 x 2,4 | SAE Ø34,9 x 16C |
| | 41310300803 | 1 | 30° | 84,7 | 27,0 | 185 | 75 | 54 | 166 | 46,2 | Ø50,8 x 2,4 | SAE Ø34,9 x 16C |
| | 41310300805 | 1 | 30° | 84,7 | 27,0 | 187 | 70 | 57 | 166 | 71,6 | Ø76,2 x 2,4 | SAE Ø34,9 x 16C |
| | 41310300806 | 1 | 30° | 84,7 | 27,0 | 187 | 70 | 57 | 166 | 73,3 | Ø76,2 x 1,6 | SAE Ø34,9 x 16C |
| | 41310307501 | 2 | 20° | 84,7 | 27,0 | 153 | 55 | 57 | 136,5 | 60,6 | Ø63,5 x 1,6 | SAE Ø34,9 x 16C |
| | 41310307502 | 2 | 20° | 84,7 | 27,0 | 153 | 55 | 54 | 136,5 | 46,2 | Ø50,8 x 2,4 | SAE Ø34,9 x 16C |
| | 41310307505 | 2 | 20° | 84,7 | 27,0 | 153 | 55 | 54 | 136,5 | 66,9 | Ø70 x 1,6 | SAE Ø34,9 x 16C |
| | 41310307506 | 2 | 20° | 84,7 | 27,0 | 153 | 55 | 54 | 136,5 | 73,3 | Ø76,2 x 1,6 | SAE Ø34,9 x 16C |
| | 41310308301 | 2 | 20° | 84,7 | 27,0 | 186 | 60 | 61 | 166 | 73,3 | Ø76,2 x 1,6 | SAE Ø38,1 x 16C |
| 1410 | 41410300103 | 1 | 20° | 109,2 | 30,1 | 193 | 70 | 61 | 168 | 84,3 | Ø88,9 x 2,4 | SAE Ø38,1 x 16C |
| | 41410300105 | 1 | 20° | 109,2 | 30,1 | 186 | 55 | 76 | 168 | 45,7 | Ø50,8 x 2,8 | SAE Ø38,1 x 16C |
| | 41410300106 | 1 | 20° | 109,2 | 30,1 | 191 | 70 | 61 | 168 | 71,6 | Ø76,2 x 2,4 | SAE Ø38,1 x 16C |
| | 41410302501 | 1 | 30° | 109,2 | 30,1 | 218 | 70 | 61 | 193 | 84,3 | Ø88,9 x 2,4 | SAE Ø38,1 x 16C |
| | 41410302504 | 1 | 30° | 109,2 | 30,1 | 215 | 80 | 76 | 193 | 45,7 | Ø50,8 x 2,8 | SAE Ø38,1 x 16C |
| | 41410302505 | 1 | 30° | 109,2 | 30,1 | 221 | 90 | 61 | 193 | 71,6 | Ø76,2 x 2,4 | SAE Ø38,1 x 16C |
| | 41410302506 | 1 | 30° | 109,2 | 30,1 | 219 | 70 | 61 | 193 | 71,6 | Ø76,2 x 2,4 | SAE Ø38,1 x 16C |
| | 41410305601 | 2 | 20° | 109,2 | 30,1 | 186 | 70 | 61 | 168 | 71,6 | Ø76,2 x 2,4 | SAE Ø38,1 x 16C |
| | 41410305602 | 2 | 20° | 109,2 | 30,1 | 186 | 70 | 61 | 168 | 84,3 | Ø88,9 x 2,4 | SAE Ø38,1 x 16C |
| 1430 | 41430300501 | 1 | 22° | 95 | 30,1 | 178 | 55 | 61 | 148 | 58,6 | Ø63,5 x 2,4 | SAE Ø38,1 x 16C |
| | 41430300502 | 1 | 22° | 95 | 30,1 | 178 | 55 | 63 | 148 | 58,9 | Ø63,5 x 2,4 | SAE Ø38,1 x 16C |
| 1480 | 41480300102 | 1 | 22° | 109,2 | 34,9 | 198 | 70 | 63 | 173 | 71,6 | Ø76,2 x 2,4 | SAE Ø44,45 x 16C |
| | 41480300104 | 1 | 22° | 109,2 | 34,9 | 198 | 75 | 63 | 173 | 84,3 | Ø88,9 x 2,4 | SAE Ø44,45 x 16C |
| | 41480300105 | 1 | 22° | 109,2 | 34,9 | 198 | 60 | 75 | 173 | 84,3 | Ø88,9 x 2,4 | SAE Ø44,45 x 16C |
| | 41480300106 | 1 | 22° | 109,2 | 34,9 | 198 | 60 | 75 | 173 | 71,6 | Ø76,2 x 2,4 | SAE Ø44,45 x 16C |
| 1510 | 41510300101 | 1 | 20° | 119,3 | 39,6 | 195 | 70 | 65 | 170 | 71,6 | Ø76,2 x 2,4 | SAE Ø44,45 x 16C |
| | 41510300104 | 1 | 20° | 119,3 | 39,6 | 195 | 75 | 63 | 170 | 84,3 | Ø88,9 x 2,4 | SAE Ø44,45 x 16C |

## END YOKES / NABENMITNEHMER / UÇ ÇATALLAR



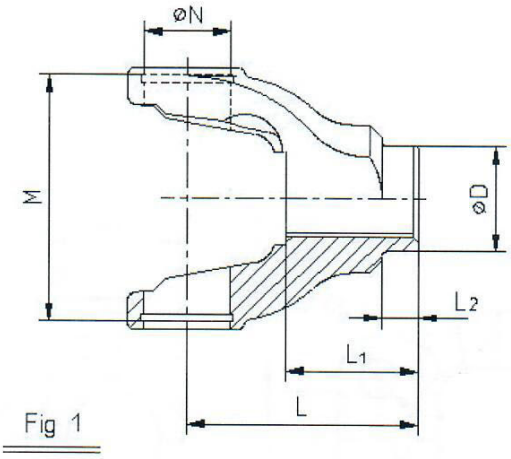


Fig 1

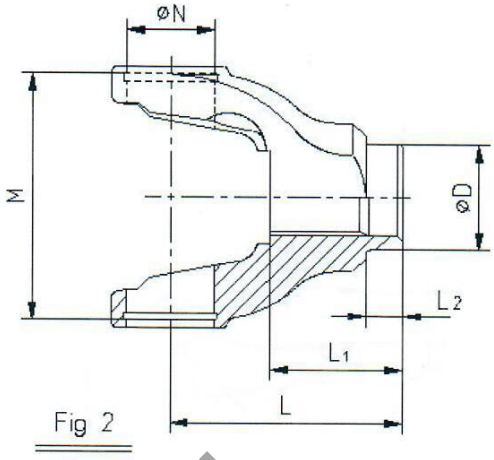


Fig 2

**KAT-04/1** 15/12/2008

| SERIE BAUGR SERİ | NEW PART NO TEIL NR NEU YENİ PARÇA NO | REF. | FIG. | D | L | L1 | L2 | M | N | ß° | SPLINE DATA ZAHNPROFIL KANAL ÖLÇÜLERİ |
|---|---|---|---|---|---|---|---|---|---|---|---|
| 1140 | 31140400500 | - | 1 | 36,0 | 57,0 | 32,5 | 18,0 | 64,2 | 23,8 | 15° | Ø 25 x 6 CANAL |
| | 31140406600 | B.R.D.02/206390 | 1 | 36,0 | 69,9 | 35,6 | 11,9 | 64,2 | 23,8 | 30° | T23 ; 24/48 ; 45° |
| | 31140406601 | - | 2 | 36,0 | 80,2 | 45,9 | 11,9 | 64,2 | 23,8 | 30° | T23 ; 24/48 ; 45° |
| | 31140408200 | - | 1 | 36,0 | 57,0 | 32,5 | 18,0 | 64,2 | 23,8 | 15° | T22 ; M=1,0583/0,5292 ; 45° |
| 1300 | 31300400600 | - | 2 | 36,0 | 80,2 | 45,9 | 12,7 | 77,5 | 27,0 | 30° | T23 ; 24/48 ; 45° |
| 1310 | 31310403900 | - | 1 | 50,0 | 63,0 | 30,0 | 19,0 | 84,7 | 27,0 | 25° | SAE 1 3/8"x10C |
| | 31310404100 | - | 2 | 36,0 | 80,2 | 45,9 | 12,7 | 84,7 | 27,0 | 30° | T23 ; 24/48 ; 45° |
| | 31310404200 | - | 1 | 49,0 | 63,0 | 30,0 | 12,0 | 84,7 | 27,0 | 25° | SAE 1 3/8"x10C |
| | 31310405100 | - | 2 | 37,0 | 80,2 | 45,9 | 17,0 | 84,7 | 27,0 | 30° | T25 ; 24/48 ; 45° |
| 420 | 34200400100 | - | 2 | 36,0 | 80,2 | 45,9 | 12,7 | 84,7 | 30,2 | 25° | T23 ; 24/48 ; 45° |
| | 34200400200 | - | 2 | 36,0 | 80,2 | 45,9 | 12,7 | 84,7 | 30,2 | 25° | T25 ; 24/48 ; 45° |
| | 34200400300 | - | 2 | 36,0 | 80,2 | 45,9 | 12,7 | 84,7 | 30,2 | 25° | T27 ; 24/48 ; 45° |
| | 34200400400 | - | 1 | 36,0 | 70,0 | 35,7 | 12,7 | 84,7 | 30,2 | 25° | T27 ; 24/48 ; 45° |



## END YOKES / NABENMITNEHMER / UÇ ÇATALLAR

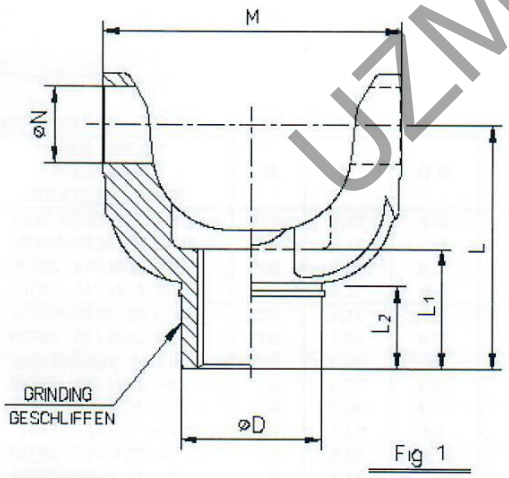


Fig 1

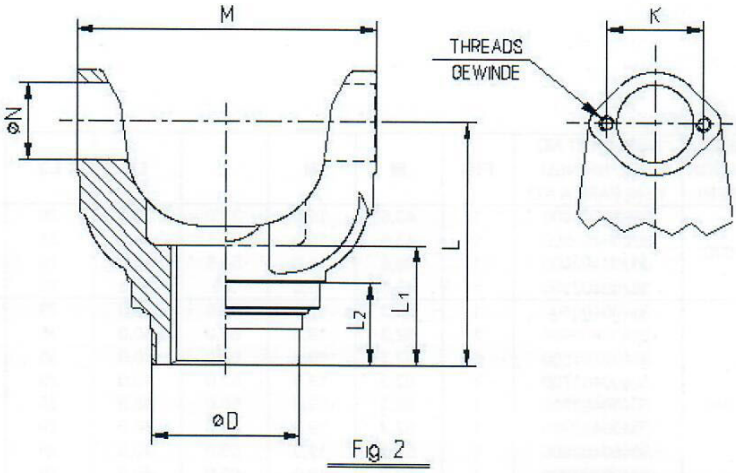


Fig 2

**KAT-04/2** 15/12/2008

| SERIE BAUGR SERİ | NEW PART NO TEIL NR NEU YENİ PARÇA NO | REF. | FIG. | D | L | L1 | L2 | M | N | ß° | SPLINE DATA ZAHNPROFIL KANAL ÖLÇÜLERİ | K | THREADS GEWINDE VİDA |
|---|---|---|---|---|---|---|---|---|---|---|---|---|---|
| 1700 | 31700400200 | D.S.6-4-3241 | 1 | 74,6 | 131,8 | 65,0 | 41,2 | 154,7 | 49,2 | 25° | Ø 50,8 x 10 CANAL | 61,9 | 3/8"UNF |
| | 31700400300 | D.S.6-4-1981 | 2 | 62,0 | 127,0 | 76,0 | 42,9 | 154,7 | 49,2 | 21° | Ø 49,8 x 10 CANAL | 61,9 | 3/8"UNF |
| 1820 | 31820400200 | - | 2 | 73,1 | 139,5 | 69,8 | 10,0 | 191,7 | 49,2 | 25° | Ø 54,1 x 16 CANAL | 61,9 | 3/8"UNF |
| | 31820400300 | - | 1 | 95,3 | 155,0 | 76,2 | 22,0 | 191,7 | 49,2 | 25° | Ø 69,9 x 10 CANAL | 61,9 | 3/8"UNF |

**ß°** - MAX. ANGULAR MOVEMENT / MAX. BEUGEWINKEL / MAX. ÇALIŞMA AÇISI

## END YOKES / NABENMITNEHMER / UÇ ÇATALLAR

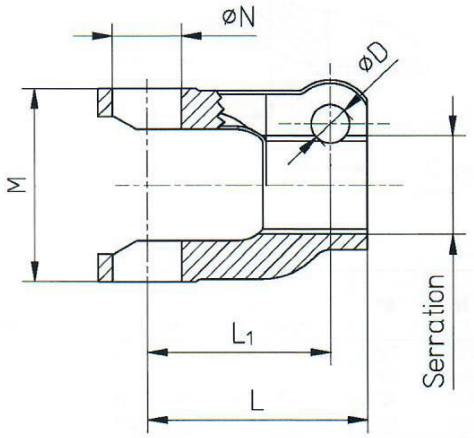


Fig. 1

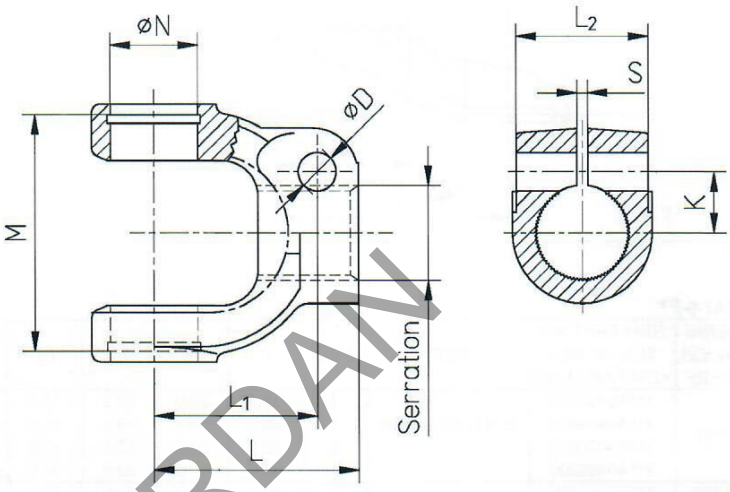


Fig. 2



**KAT-04/3** 15/12/2008

| SERIE BAUGR SERI | NEW PART NO TEIL NR NEU YENI PARÇA NO | FIG | M | N | L | L1 | L2 | S | Ø D | K | ß° | SPLINE DATA ZAHNPROFIL KANAL ÖLÇÜLERI |
|---|---|---|---|---|---|---|---|---|---|---|---|---|
| 020 | 30200400400 | 1 | 43,6 | 15,0 | 39,0 | 30,5 | 29 | 3 | 8,3 | 11,1 | 40° | 3/4" x 48 SERRATION |
| | 30200400500 | 1 | 43,6 | 15,0 | 54,5 | 44,5 | 28 | 3 | 8,3 | 11,1 | 90° | 3/4" x 48 SERRATION |
| | 30200402000 | 1 | 43,6 | 15,0 | 54,5 | 44,5 | 28 | 3 | 10,4 | 12,9 | 90° | 1 x 54 ZGN 715 SERR. |
| | 30200402100 | 1 | 43,6 | 15,0 | 40 | 30,5 | 29 | 3 | 9,6 | 12,9 | 40° | 1 x 54 ZGN 715 SERR. |
| 040 | 30400400100 | 1 | 52,3 | 19,0 | 50,0 | 40,0 | 29 | 3 | 8,3 | 11,1 | 90° | 3/4" x 48 SERRATION |
| | 30400400600 | 1 | 52,3 | 19,0 | 60,0 | 50,0 | 35 | 3 | 10,4 | 16,7 | 90° | 1 x 79 ZGN 715 SERR. |
| | 30400401500 | 1 | 52,3 | 19,0 | 60,0 | 50,0 | 35 | 3 | 9,6 | 14,3 | 90° | 7/8 x 48 SERRATION |
| | 30400401700 | 1 | 52,3 | 19,0 | 50,0 | 40,0 | 29 | 3 | 10,4 | 13,3 | 90° | 1 x 54 ZGN 715 SERR. |
| | 30400402200 | 1 | 52,3 | 19,0 | 50,0 | 40,0 | 35 | 3 | 10,4 | 16,7 | 90° | 1 x 79 ZGN 715 SERR. |
| | 30400402300 | 1 | 52,3 | 19,0 | 50,0 | 40,0 | 29 | 3 | 8,4 | 13,5 | 90° | 1 x 66 N 442 SERR. |
| | 30400402500 | 1 | 52,3 | 19,0 | 50,0 | 40,0 | 29 | 3 | 8,4 | 12,2 | 90° | 1 x 54 ZGN 715 SERR. |
| | 30400402900 | 1 | 52,3 | 19,0 | 50,0 | 40,0 | 29 | 3 | M10x1,25 | 13,4 | 90° | 3/4" x 48 SERRATION |
| | 30400403000 | 1 | 52,3 | 19,0 | 50,0 | 40,0 | 32,5 | 3 | 8,4 | 15,8 | 45° | 1 x 79 ZGN 715 SERR. |
| 1140 | 31140401602 | 2 | 64,2 | 23,8 | 55,8 | 41,4 | 28 | 3 | 11,9 | 13,1 | | 3/4" x 36 SERRATION |
| | 31140401700 | 2 | 64,2 | 23,8 | 55,8 | 44,5 | 36 | 3 | 10,4 | 16,7 | | 1 x 79 ZGN 715 SERR. |
| | 31140401701 | 2 | 64,2 | 23,8 | 55,8 | 44,5 | 36 | 3 | 10,4 | 16,3 | | 1 x 79 ZGN 715 SERR. |
| | 31140402301 | 2 | 64,2 | 23,8 | 61,0 | 50,0 | 36 | 3 | 9,6 | 14,3 | | 7/8" x 48 SERRATION |
| | 31140403100 | 2 | 64,2 | 23,8 | 55,8 | 41,4 | 38 | 3 | 10,1 | 15,5 | | 1 x 75 ZGN 715 SERR. |
| | 31140403200 | 2 | 64,2 | 23,8 | 55,8 | 41,4 | 38 | 3 | 10,1 | 16,5 | | 1 x 75 ZGN 715 SERR. |
| | 31140407100 | 2 | 64,2 | 23,8 | 55,8 | 44,5 | 36 | 3 | 10,4 | 16,7 | | 1 x 79 ZGN 715 SERR. |
| | 31140407500 | 2 | 64,2 | 23,8 | 60,0 | 48,0 | 35 | 3 | 12,1 | 14,0 | | ø22 |

**ß°** - MAX. ANGULAR MOVEMENT / MAX. BEUGEWINKEL / MAX. ÇALIŞMA AÇISI

## TUBE YOKES / GELENKGABEL / TÜP ÇATALLAR



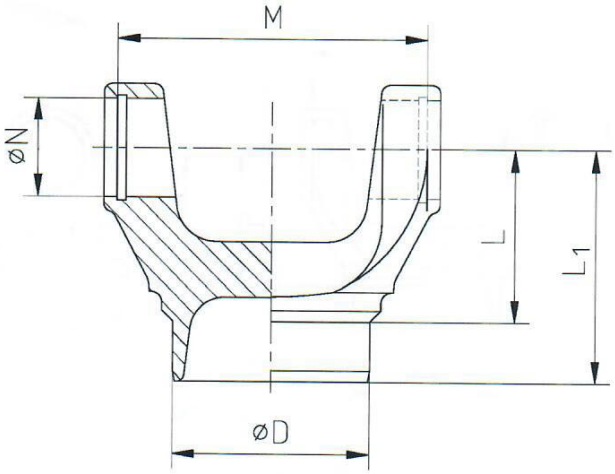


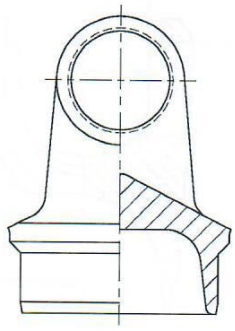

**KAT-26/1**

16/12/2008

| SERIE BAUGR SERİ | NEW PART NO TEIL NR NEU YENİ PARÇA NO | REF. | ANGEL WINKEL AÇI | D | L | L1 | M | N | TUBE O.D.xW.THICKNESS ROHRDURCHMESSER xDICKE BORU ÇAPIxET KALINLIĞI |
|---|---|---|---|---|---|---|---|---|---|
| 1140 | 31142600100 | HS: 1426-137/DS: 1-2-39 | 17 | 66,9 | 33,3 | 48 | 64,2 | 23,8 | 2 3/4" x 0,064" |
| | 31142600900 | HS: 1426-717 | 17 | 73,3 | 36,5 | 52 | 64,2 | 23,8 | 3" x 0,064" |
| | 31142601002 | HS: 1426-897 | 17 | 39,9 | 35,0 | 52 | 64,2 | 23,8 | 1 3/4" x 0,095" |
| | 31142601100 | HS: 1426-067 | 17 | 60,6 | 35,0 | 52 | 64,2 | 23,8 | 2 1/2" x 0,064" |
| | 31142601300 | HS: 1426-017 | 17 | 47,8 | 35,0 | 52 | 64,2 | 23,8 | 2" x 0,064" |
| | 31142601500 | - | 17 | 46,2 | 35,0 | 52 | 64,2 | 23,8 | 2" x 0,095" |
| | 31142601600 | HS: 1426-037 | 17 | 41,7 | 35,0 | 52 | 64,2 | 23,8 | 1 3/4" x 0,064" |
| 1300 | 31302600100 | BRD: 03/212287 | 17 | 97,9 | 44,5 | 64 | 77,5 | 27,0 | 4" x 0,080" |
| | 31302601600 | HS: 3026-2607 | 20 | 46,2 | 44,5 | 64 | 77,5 | 27,0 | 2" x 0,095" |
| | 31302602800 | HS: 3026-2647 | 20 | 47,8 | 44,5 | 60 | 77,5 | 27,0 | 2" x 0,064" |
| | 31302603100 | HS: 3026-1567 | 20 | 73,3 | 44,5 | 63 | 77,5 | 27,0 | 3" x 0,064" |
| | 31302603200 | - | 20 | 66,8 | 44,5 | 64 | 77,5 | 27,0 | 2 3/4" x 0,064" |
| | 31302603300 | - | 20 | 60,6 | 44,5 | 65 | 77,5 | 27,0 | 2 1/2" x 0,064" |
| | 31302603600 | - | 20 | 45,1 | 44,5 | 64 | 77,5 | 27,0 | 50 x 2,5 mm |
| | 31302603700 | - | 20 | 59,9 | 44,5 | 64 | 77,5 | 27,0 | 64 x 2 mm |
| 1310 | 31312600300 | HS:3126-2897/DS:2-28-327 | 20 | 73,3 | 42,9 | 56 | 84,7 | 27,0 | 3" x 0,064" |
| | 31312601000 | HS: 3126-2917 | 30 | 66,9 | 55,0 | 70 | 84,7 | 27,0 | 2 3/4" x 0,064" |
| | 31312601100 | - | 30 | 71,6 | 55,0 | 70 | 84,7 | 27,0 | 3" x 0,095" |
| | 31312601200 | HS:3126-1417/DS:2-28-577 | 20 | 46,2 | 42,9 | 63 | 84,7 | 27,0 | 2" x 0,095" |
| | 31312601300 | HS: 3126-2057 | 30 | 46,2 | 49,2 | 64 | 84,7 | 27,0 | 2" x 0,095" |
| | 31312601600 | - | 25 | 72,3 | 42,9 | 55,6 | 84,7 | 27,0 | 3" x 0,083" |
| | 31312602200 | - | 30 | 39,9 | 49,2 | 64 | 84,7 | 27,0 | 1 3/4" x 0,095" |
| | 31312602600 | HS:3126-2907/DS:2-28-277 | 30 | 60,6 | 47,0 | 62,5 | 84,7 | 27,0 | 2 1/2" x 0,064" |
| | 31312602700 | - | 30 | 73,3 | 55,0 | 70 | 84,7 | 27,0 | 3" x 0,064" |
| | 31312603100 | - | 30 | 59,0 | 47,0 | 64 | 84,7 | 27,0 | 2 1/2" x 0,095" |
| | 31312603300 | - | 20 | 44,2 | 42,9 | 63 | 84,7 | 27,0 | 50 x 3 mm |
| | 31312603400 | DS: 2-28-357 | 20 | 46,8 | 42,9 | 63 | 84,7 | 27,0 | 2" x 0,083" |
| | 31312603800 | - | 30 | 54,1 | 47,0 | 64 | 84,7 | 27,0 | 60 x 3 mm |
| | 31312604000 | - | 30 | 44,1 | 49,0 | 64 | 84,7 | 27,0 | 50 x 3 mm |
| | 31312604200 | - | 20 | 97,6 | 38,1 | 53,5 | 84,7 | 27,0 | 4" x 0,080" |
| 1410 | 31412600100 | HS: 4126-2887 | 20 | 71,6 | 54,0 | 70 | 109,2 | 30,1 | 3" x 0,095" |
| | 31412600500 | HS: 4126-1637 | 20 | 84,3 | 54,0 | 70 | 109,2 | 30,1 | 3 1/2" x 0,095" |
| | 31412600800 | HS: 4126-657 | 20 | 45,5 | 52,0 | 74 | 109,2 | 30,1 | 2" x 0,109" |
| | 31412601800 | - | 35 | 44,1 | 54,0 | 75 | 109,2 | 30,1 | 52 x 4mm |
| 1430 | 31432600300 | - | 22 | 73,3 | 50,8 | 70 | 94,9 | 30,1 | 3" x 0,064" |
| | 31432600400 | - | 20 | 97,6 | 43,0 | 58,1 | 94,9 | 30,1 | 4" x 0,083" |
| 1480 | 31482600100 | - | 22 | 71,6 | 51,6 | 67 | 109,2 | 34,9 | 3" x 0,095" |
| | 31482600200 | - | 22 | 84,3 | 51,6 | 73 | 109,2 | 34,9 | 3 1/2" x 0,095" |
| | 31482600900 | - | 22 | 82,3 | 58,0 | 74 | 109,2 | 34,9 | 3 1/2" x 0,134" |
| 1510 | 31512600100 | HS: 5126-547 | 22 | 84,3 | 71,4 | 93,6 | 119,3 | 39,6 | 3 1/2" x 0,095" |
| | 31512600200 | HS: 5126-477 | 22 | 71,6 | 71,4 | 94 | 119,3 | 39,6 | 3" x 0,095" |
| 1630 | 31632600100 | BRD: 63/212562 | 35 | 83,4 | 81,0 | 107 | 119,3 | 39,6 | 90 x 3,5mm |
| 287 | 32872600100 | - | 35 | 44,1 | 55,0 | 70 | 85,1 | 30,0 | 50 x 3 mm |
| | 32872600200 | - | 25 | 71,6 | 45,0 | 61 | 85,1 | 30,0 | 3" x 0,095" |
| 350 | 33502600100 | - | 15 | 44,1 | 70,0 | 87 | 92,7 | 38 | 52 x 4 mm |
| 381 | 33812600100 | MB: 3814111105 | 25 | 85,1 | 80,0 | 95 | 109,4 | 42,0 | 90 x 2,5mm |
| | 33812600200 | - | 25 | 84,3 | 80,0 | 97 | 109,4 | 42,0 | 3 1/2" x 0,095" |
| | 33812600300 | - | 25 | 81,1 | 70,0 | 87 | 109,4 | 42,0 | 90 x 4,5mm |
| | 33812600500 | - | 25 | 83,1 | 80,0 | 97 | 109,4 | 42,0 | 90 x 3,5mm |
| 385 | 33852600800 | MB: 3854113805 | 25 | 82,1 | 101,0 | 122 | 129,2 | 48,0 | 92 x 5mm |
| | 33852601700 | - | 25 | 84,3 | 101,0 | 122 | 129,2 | 48,0 | 3 1/2" x 0,095" |

## TUBE YOKES / GELENKGABEL / TÜP ÇATALLAR

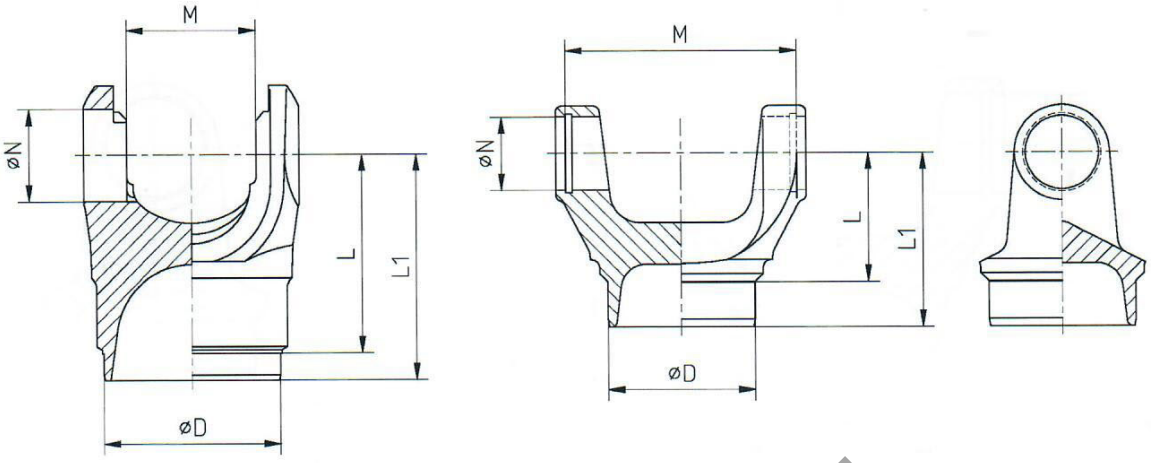


**KAT-26/2** 16/12/2007

| SERIE BAUGR SERİ | NEW PART NO TEIL NR NEU YENİ PARÇA NO | REF. | ANGEL WINKEL AÇI | D | L | L1 | M | N | TUBE O.D.xW.THICKNESS ROHRDURCHMESSER xDICKE BORU ÇAPIxET KALINLIĞI |
|---|---|---|---|---|---|---|---|---|---|
| 389 | 33892600100 | MB: 3894112605 | 35 | 90,1 | 116,0 | 135 | 139,0 | 53,0 | 100 x 5mm |
| | 33892600400 | - | 44 | 90,1 | 116,0 | 135 | 139,0 | 53,0 | 100 x 5mm |
| | 33892600600 | - | 25 | 112,1 | 90,0 | 109 | 139,0 | 53,0 | 120 x 4mm |
| | 33892600800 | - | 25 | 112,1 | 86,0 | 104 | 139,0 | 53,0 | 120 x 4mm |
| 395 | 33952600200 | Similar to MB: 3954110905 | 25 | 98,1 | 116,0 | 131 | 155,9 | 57,0 | 110 x 6mm |
| | 33952600500 | Similar to GWB: 2687554000000 | 25 | 108,1 | 116,0 | 131 | 155,9 | 57,0 | 120 x 6mm |
| 420 | 34202600100 | - | 25 | 73,3 | 45,0 | 61 | 84,7 | 30,2 | 3" x 0,064" |
| | 34202600200 | - | 25 | 71,6 | 45,0 | 61 | 84,7 | 30,2 | 3" x 0,095" |
| | 34202600300 | - | 35 | 44,1 | 55,0 | 70 | 84,7 | 30,2 | 50 x 3mm |
| | 34202600500 | - | 35 | 46,1 | 55,0 | 70 | 84,7 | 30,2 | 54 x 4mm |
| | 34202600600 | - | 25 | 65,4 | 56,0 | 72 | 84,7 | 30,2 | 70 x 2,4mm |
| 424 | 34242600100 | - | 35 | 64,1 | 70,0 | 86 | 100,0 | 35,0 | 70 x 3mm |
| 434 | 34342600200 | - | 44 | 90,1 | 116,0 | 135 | 137,0 | 52,0 | 100 x 5mm |
| | 34342600301 | - | 35 | 79,1 | 94,0 | 120 | 137,0 | 52,0 | 90 x 5,5mm |
| 445 | 34452600100 | | 30 | 112,1 | 90,0 | 116 | 151,2 | 52,0 | 120 x 4mm |
| | 34452600200 | Similar to GWB: 2687454000040 | 27 | 112,3 | 95,0 | 116 | 151,2 | 52,0 | 120 x 4mm |
| | 34452600300 | Similar to GWB: 2687454700000 | 44 | 100,3 | 108,0 | 129 | 151,2 | 52,0 | 110 x 5mm |
| 446 | 34462600100 | - | 30 | 112,1 | 90,0 | 114 | 151,2 | 53,0 | 120 x 4mm |
| 468 | 34682600100 | MB: 6564112605 | 22 | 98,5 | 126,0 | 145 | 158,0 | 68,0 | 110 x 6mm |
| | 34682600200 | - | 22 | 130,1 | 145,0 | 165 | 158,0 | 68,0 | 140 x 5mm |

## TUBE YOKES / GELENKGABEL / TÜP ÇATALLAR

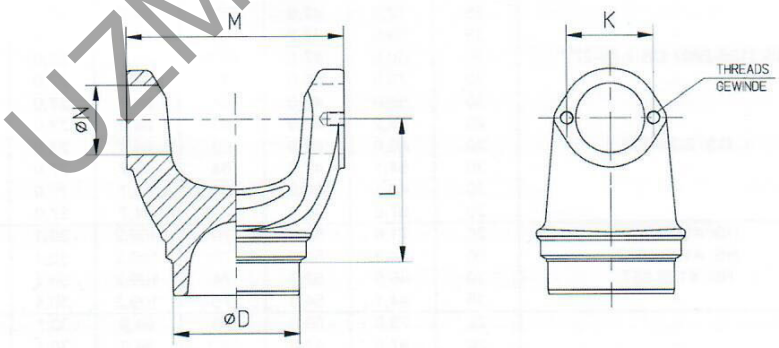


**KAT-26/3** 16/12/2008

| SERIE BAUGR SERİ | NEW PART NO TEIL NR NEU YENİ PARÇA NO | REF. | ANGEL WINKEL AÇI | D | K | L | M | N | TUBE O.D. x W.THICKNESS ROHRDURCHMESSER x DICKE BORU ÇAPI x ET KALINLIĞI | THREADS GEWINDE VİDA |
|---|---|---|---|---|---|---|---|---|---|---|
| 1600 | 31602600300 | DS: 5-28-627 | 35 | 82,3 | 58,7 | 76,2 | 134,9 | 47,6 | 3 1/2" x 0,134" | 5/16"UNF |
| | 31602600700 | HS: 6026-947 | 35 | 82,5 | 58,7 | 76,2 | 134,9 | 47,6 | 3 1/2" x 0,120" | 5/16"UNF |
| 1700 | 31702601200 | - | 33 | 80,0 | 60,4 | 100,0 | 154,7 | 49,2 | 3 1/2" x 0,188" | M8 x1,25 |
| | 31702601300 | - | 33 | 83,2 | 60,4 | 100,0 | 154,7 | 49,2 | 3 1/2" x 0,120" | M8 x1,25 |
| | 31702601600 | - | 33 | 82,1 | 60,4 | 100,0 | 154,7 | 49,2 | 92 x 5mm | 5/16"BSF |
| | 31702602200 | DS: 6-28-347 | 22 | 95,0 | 61,9 | 77,0 | 154,7 | 49,2 | 4" x 0,134" | 3/8" UNF |
| 1800 | 31802601700 | - | 33 | 98,1 | 71,5 | 92,0 | 167,4 | 59,0 | 110 x 6mm | 3/8" BSF |
| | 31802601800 | - | 33 | 80,0 | 71,5 | 92,0 | 167,4 | 59,0 | 3 1/2" x 0,188" | 3/8" BSF |
| | 31802602000 | HS:8026-107/DS:6.5-26-111 | 33 | 80,0 | 71,5 | 92,0 | 167,4 | 59,0 | 3 1/2" x 0,188" | 3/8" BSF |
| 1820 | 31822600100 | DS: 6.5-28-117 | 30 | 107,7 | 61,9 | 85,7 | 191,7 | 49,2 | 4 1/2" x 0,134" | 3/8" UNF |
| | 31822600300 | - | 30 | 101,4 | 61,9 | 85,7 | 191,7 | 49,2 | 4 1/2" x 0,259" | 3/8" UNF |

## COUPLINGS / ELASTISCHE KUPPLUNGEN / ELASTİK KAVRAMALAR



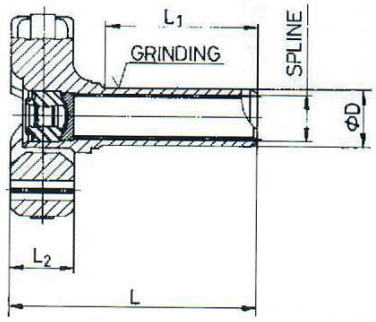


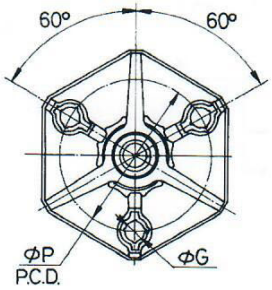


Fig. 1

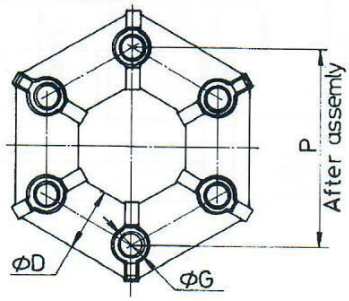


Fig. 2

KAT-27/1

07/03/02

| SERIE BAUGR SERİ | NEW PART NO TEIL NR NEU YENİ PARÇA NO | REF. | FİG. | L | L1 | L2 | D | P | NO.OF HOLES xG LOCHANZAHL xG DELİK ADEDİ xG | SPLINE DATA ZAHNPROFIL KANAL ÖLÇÜLERI |
|---|---|---|---|---|---|---|---|---|---|---|
| 1140 | 41142700901 | 76BG-4K175-EA | 1 | 158 | 99 | 39 | 30,17 | 93,0 | 3 x 12,10/12,40 | D:22,7 D.P:24/48 Z:20 |
| | 41142700902 | 76BG-4K175-DA | 1 | 158 | 99 | 39 | 34,93 | 93,0 | 3 x 12,10/12,40 | D:28,2 D.P:24/32 Z:25 |
| | 41142800100 | FIAT4516801 | 2 | - | - | - | 35 | 100 | 6 x 12,10/12,25 | - |

## SPIDERS / KUPPLUNSGNABE / KAYICI GÖBEKLER

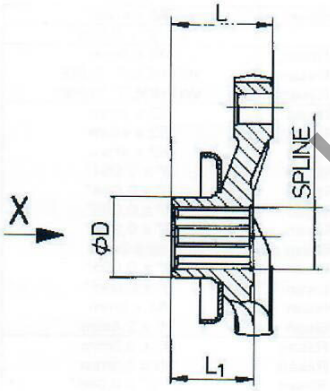


Fig. 3

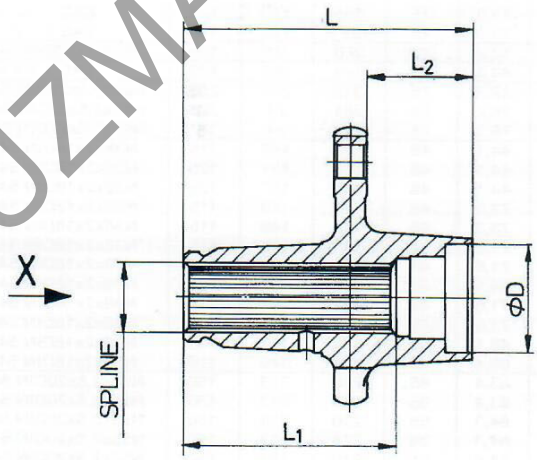


Fig. 4

View X

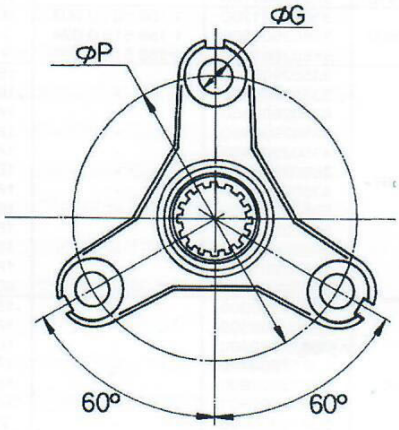


KAT-27/2

07/03/02

| SERIE BAUGR SERİ | NEW PART NO TEIL NR NEU YENİ PARÇA NO | REF. | FİG. | L | L1 | L2 | D | P | NO.OF HOLES xG LOCHANZAHL xG DELİK ADEDİ xG | SPLINE DATA ZAHNPROFIL KANAL ÖLÇÜLERI |
|---|---|---|---|---|---|---|---|---|---|---|
| 1140 | 41142700100 | - | 4 | 87 | 61 | 35,5 | 40 | 100 | 3 x 12,0/12,1 | SAE1 1/16" x 16 C |
| | 41142700600 | FIAT85003172 | 4 | 108 | 78 | 39,5 | 40 | 100 | 3 x 12,0/12,1 | SAE1 1/16" x 16 C |
| | 41142700200 | FIAT4152586 | 3 | 40 | 33 | - | 32 | 100 | 3 x 12,0/12,1 | SAE 25 x 6 C |

## 18 TUBE SLEEVES / KEILNABEN / TÜP KAYICILAR

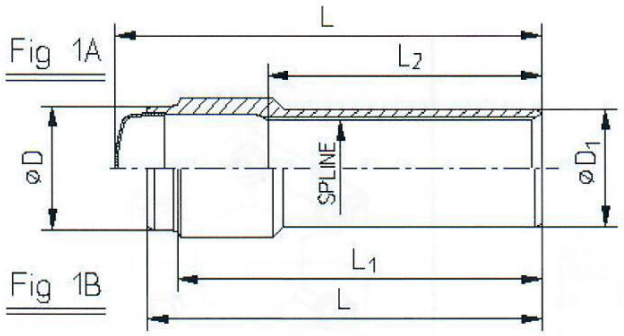


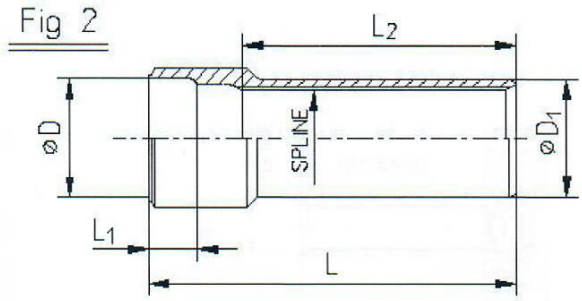


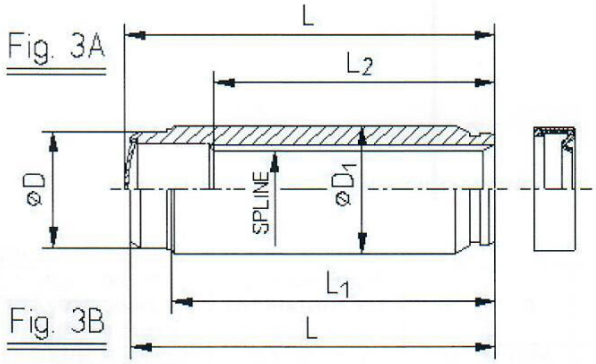


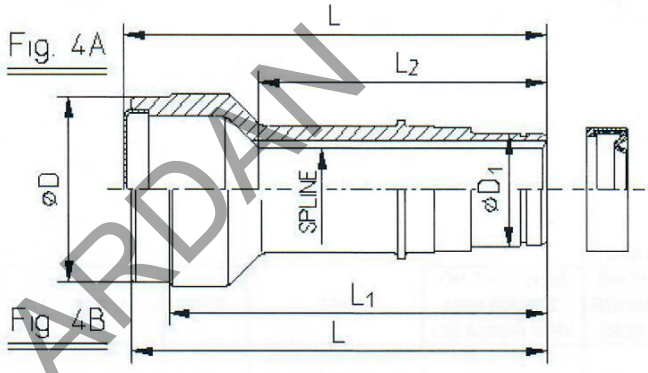


KAT-29/1 17/12/2008

| SERIE BAUGR SERİ | NEW PART NO TEIL NR NEU YENİ PARÇA NO | REF. | FIG. | D | D1 | L | L1 | L2 | SPLINE DATA ZAHNPROFIL KANAL ÖLÇÜLERİ | TUBE O.D.xW.THICKNESS ROHRDURCHMESSER xDICKE BORU ÇAPI x ET KALINLIĞI |
|---|---|---|---|---|---|---|---|---|---|---|
| 1300 | 31302900100 | 1 110 501 0 004 | 1B | 44,2 | 45 | 154 | 136 | 119 | N35x2x16DIN 5480-Rilsan | 50 x 3mm |
| 1310 | 41312900700 | - | 3A | 46,2 | 51 | 146 | 131 | 106 | SAE 1 3/8"x16C | 2" x 0,095" |
| 1410 | 41412900300 | - | 4A | 73,3 | 45 | 165 | 150 | 122 | SAE 1 1/2"x16C | 3" x 0,064" |
| | 41412900400 | - | 3A | 73,3 | 50 | 165 | 150 | 122 | SAE 1 1/2"x16C | 3" x 0,064" |
| | 41412900600 | - | 4A | 73,3 | 45 | 165 | 150 | 122 | SAE 1 1/2"x16C | 3" x 0,064" |
| | 41412900800 | - | 4A | 73,3 | 45 | 168,5 | 150 | 115 | SAE 1 1/2"x16C | 3" x 0,064" |
| 1430 | 31432900100 | 1 112 504 0 004 | 1B | 52,2 | 52 | 200 | 180 | 156 | N42x2x20DIN 5480-Rilsan | 60 x 4mm |
| 1510 | 31512900100 | - | 1B | 84,3 | 55 | 181 | 164 | 133 | SAE 1 3/4"x16C | 3 1/2" x 0,095" |
| 1600 | 31602901200 | 1 158 501 0 003 | 1B | 82,3 | 75 | 313 | 288 | 205 | N60x2,5x22DIN 5480-Rilsan | 90 x 4mm |
| | 31602901300 | 1 158 515 0 024 | 2 | 76,2 | 75 | 281 | 24 | 205 | N60x2,5x22DIN 5480-Rilsan | WITHOUT TUBE |
| | 31602901400 | 1 158 515 0 020 | 2 | 76,2 | 75 | 196 | 24 | 151 | N60x2,5x22DIN 5480-Rilsan | WITHOUT TUBE |
| 350 | 33502900100 | - | 1B | 44,1 | 48 | 173 | 157 | 115 | N38x2x18DIN 5480-Rilsan | 52 x 4mm |
| | 33502900300 | - | 1B | 44,1 | 48 | 173 | 157 | 125 | N38x2x18DIN 5480-Rilsan | 52 x 4mm |
| | 43502900300 | - | 1A | 44,1 | 48 | 180 | 157 | 125 | N38x2x18DIN 5480-Rilsan | 52 x 4mm |
| | 33502900400 | - | 1B | 73,3 | 48 | 165 | 149 | 115 | N38x2x18DIN 5480-Rilsan | 3" x 0,064" |
| | 43502900400 | - | 1A | 73,3 | 48 | 168 | 149 | 115 | N38x2x18DIN 5480-Rilsan | 3" x 0,064" |
| | 33502900500 | - | 1B | 71,6 | 48 | 165 | 149 | 115 | N38x2x18DIN 5480-Rilsan | 3" x 0,095" |
| | 43502900500 | - | 1A | 71,6 | 48 | 168 | 149 | 115 | N38x2x18DIN 5480-Rilsan | 3" x 0,095" |
| | 33502900800 | - | 1B | 44,1 | 48 | 173 | 157 | 135 | N38x2x18DIN 5480-Rilsan | 50 x 3mm |
| | 33502900900 | - | 1B | 71,6 | 48 | 222 | 205 | 130 | N38x2x18DIN 5480-Rilsan | 3" x 0,095" |
| | 33502901200 | - | 1B | 71,6 | 48 | 177 | 160 | 140 | N38x2x18DIN 5480-Rilsan | 3" x 0,095" |
| | 33502901600 | - | 1B | 46,1 | 50 | 173 | 157 | 133 | N38x2x18DIN 5480-Rilsan | 54 x 4mm |
| | 33502902200 | - | 4B | 65,4 | 45 | 165 | 149 | 115 | N38x2x18DIN 5480-Rilsan | 70 x 2,4mm |
| 381 | 33812900300 | - | 1B | 83,4 | 65 | 230 | 213 | 150 | N55x2,5x20DIN 5480-Rilsan | 90 x 3,5mm |
| | 43812900300 | - | 1A | 83,4 | 65 | 244 | 213 | 150 | N55x2,5x20DIN 5480-Rilsan | 90 x 3,5mm |
| | 33812900400 | - | 1B | 84,3 | 65 | 230 | 213 | 150 | N55x2,5x20DIN 5480-Rilsan | 3 1/2" x 0,095" |
| | 43812900400 | - | 1A | 84,3 | 65 | 244 | 213 | 150 | N55x2,5x20DIN 5480-Rilsan | 3 1/2" x 0,095" |
| | 33812900600 | - | 1B | 71,6 | 65 | 210 | 193 | 150 | N55x2,5x20DIN 5480-Rilsan | 3" x 0,095" |
| | 43812900600 | - | 1A | 71,6 | 65 | 235 | 193 | 150 | N55x2,5x20DIN 5480-Rilsan | 3" x 0,095" |
| | 33812900800 | - | 2 | 89,9 | 65 | 130 | 18 | 85 | N55x2,5x20DIN 5480-Rilsan | WITHOUT TUBE |
| | 33812901200 | - | 1B | 72,4 | 70 | 210 | 185 | 160 | N55x2,5x20DIN 5480-Rilsan | 80 x 4mm |
| | 33812901500 | - | 2 | 85,0 | 65 | 220 | 23 | 155 | N55x2,5x20DIN 5480-Rilsan | WITHOUT TUBE |
| 385 | 33852900300 | MB: 3854110408 | 1B | 82,1 | 80 | 250 | 233 | 184 | N65x2,5x24DIN 5480-Rilsan | 92 x 5mm |
| | 43852900300 | MB: 3854110412 | 1A | 82,1 | 80 | 264 | 233 | 184 | N65x2,5x24DIN 5480-Rilsan | 92 x 5mm |
| | 33852901200 | - | 2 | 77,9 | 80 | 245 | 26 | 184 | N65x2,5x24DIN 5480-Rilsan | WITHOUT TUBE |
| | 33852901300 | - | 2 | 77,9 | 80 | 231 | 23 | 184 | N65x2,5x24DIN 5480-Rilsan | WITHOUT TUBE |
| | 33852902000 | - | 2 | 81,9 | 80 | 245 | 23 | 180 | N65x2,5x24DIN 5480-Rilsan | WITHOUT TUBE |
| | 43852902100 | - | 1A | 79,1 | 80 | 264 | 233 | 184 | N65x2,5x24DIN 5480-Rilsan | 92 x 6,5mm |
| | 33852902200 | - | 1B | 82,1 | 80 | 290 | 273 | 210 | N65x2,5x24DIN 5480-Rilsan | 92 x 5mm |
| | 33852902400 | - | 2 | 77,9 | 80 | 217 | 32 | 170 | N65x2,5x24DIN 5480-Rilsan | WITHOUT TUBE |
| | 33852902900 | 1 117 501 0 003 | 1B | 90,3 | 81 | 265 | 235 | 184 | N65x2,5x24DIN 5480-Rilsan | 100 x 5mm |
| | 33852903200 | - | 2 | 81,9 | 80 | 245 | 23 | 181 | N65x2,5x24DIN 5480-Rilsan | WITHOUT TUBE |
| | 33852903300 | - | 2 | 77,9 | 80 | 151 | 23 | 98 | N65x2,5x24DIN 5480-Rilsan | WITHOUT TUBE |

## TUBE SLEEVES / KEILNABEN / TÜP KAYICILAR



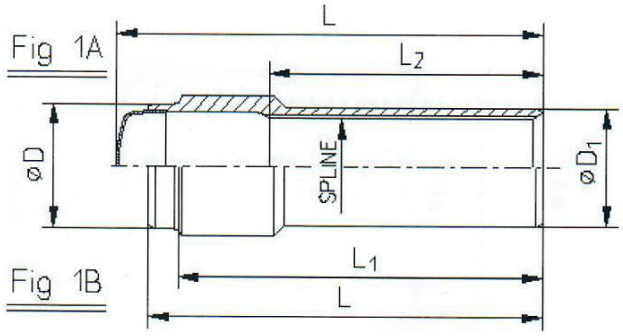


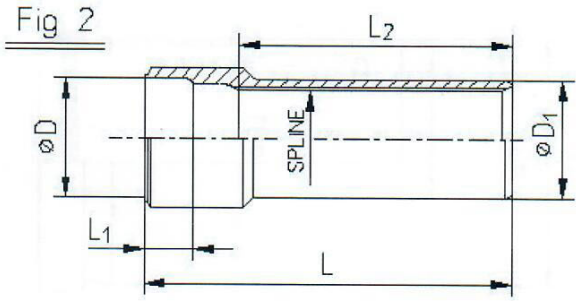


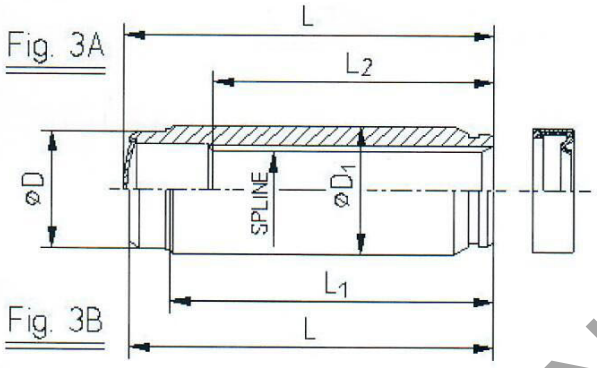


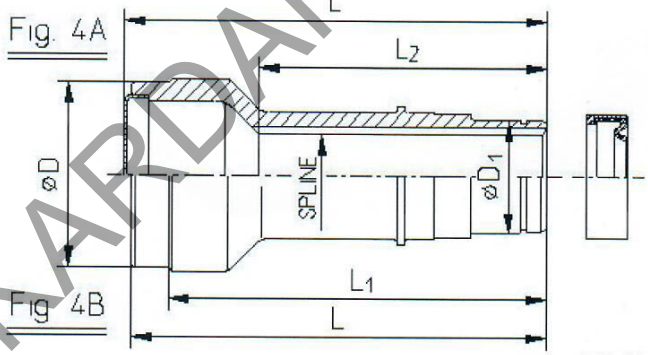




KAT-29/2

17/12/2008

| SERIE BAUGR SERİ | NEW PART NO TEIL NR NEU YENİ PARÇA NO | REF. | FIG. | D | D1 | L | L1 | L2 | SPLINE DATA ZAHNPROFIL KANAL ÖLÇÜLERİ | TUBE O.D.xW.THICKNESS ROHRDURCHMESSER xDICKE BORU ÇAPI x ET KALINLIĞI |
|---|---|---|---|---|---|---|---|---|---|---|
| 389 | 33892900100 | MB: 3894110608 | 1B | 90,1 | 86 | 280 | 263 | 193 | N72x2,5x27DIN 5480-Rilsan | 100 x 5mm |
| | 43892900100 | MB: 3894100312 | 1A | 90,1 | 86 | 280 | 263 | 193 | N72x2,5x27DIN 5480-Rilsan | 100 x 5mm |
| | 33892900200 | - | 2 | 89,9 | 86 | 225 | 25 | 158 | N72x2,5x27DIN 5480-Rilsan | WITHOUT TUBE |
| | 43892900500 | - | 1A | 90,1 | 86 | 300 | 283 | 222 | N72x2,5x27DIN 5480-Rilsan | WITHOUT TUBE |
| | 33892900800 | - | 2 | 89,9 | 86 | 250 | 31 | 182 | N72x2,5x27DIN 5480-Rilsan | WITHOUT TUBE |
| | 33892901000 | MB: 3894111108 | 2 | 89,9 | 86 | 199 | 23 | 140 | N72x2,5x27DIN 5480-Rilsan | WITHOUT TUBE |
| | 33892901100 | - | 2 | 89,9 | 86 | 275 | 23 | 195 | N72x2,5x27DIN 5480-Rilsan | WITHOUT TUBE |
| | 33892901200 | - | 2 | 89,9 | 86 | 209 | 23 | 150 | N72x2,5x27DIN 5480-Rilsan | WITHOUT TUBE |
| | 43892901300 | - | 1A | 90,1 | 86 | 295 | 248 | 185 | N72x2,5x27DIN 5480-Rilsan | 100 x 5mm |
| 395 | 33952900400 | - | 1B | 108,1 | 93 | 270 | 250 | 210 | N80x2,5x30DIN 5480-Rilsan | 120 x 6mm |
| | 33952900600 | MB: 3954111208 | 1B | 98,1 | 93 | 312 | 293 | 218 | N80x2,5x30DIN 5480-Rilsan | 110 x 6mm |
| | 43952900600 | - | 1A | 98,1 | 93 | 338 | 293 | 218 | N80x2,5x30DIN 5480-Rilsan | 110 x 6mm |
| | 33952900802 | - | 1B | 98,5 | 93 | 255 | 236 | 180 | N80x2,5x30DIN 5480-Rilsan | 110 x 6mm |
| | 33952900902 | - | 1B | 130,1 | 93 | 277 | 258 | 188 | N80x2,5x30DIN 5480-Rilsan | 140 x5mm |
| 424 | 34242900100 | - | 1B | 64,1 | 55 | 192 | 175 | 150 | N45x2,5x16DIN 5480-Rilsan | 70 x 3mm |
| | 34242900300 | - | 1B | 84,3 | 55 | 181 | 164 | 115 | N45x2,5x16DIN 5480-Rilsan | 3 1/2" x 0,095" |
| | 34242900400 | - | 1B | 84,1 | 55 | 181 | 164 | 130 | N45x2,5x16DIN 5480-Rilsan | 90 x 3mm |
| | 34242900800 | - | 1B | 71,7 | 55 | 132 | 115 | 98 | N45x2,5x16DIN 5480-Rilsan | 3" x 0,095" |
| | 34242901000 | - | 2 | 63,0 | 56 | 190 | 19 | 130 | N45x2,5x16DIN 5480-Rilsan | WITHOUT TUBE |
| 446 | 34462900100 | - | 1B | 112,1 | 93 | 270 | 250 | 212 | N75x2,5x28DIN 5480-Rilsan | 120 x 4mm |
| | 44462900100 | - | 1A | 112,1 | 93 | 283 | 250 | 212 | N75x2,5x28DIN 5480-Rilsan | 120 x 4mm |
| | 34462900600 | 1 120 501 0 003 | 1B | 98,3 | 93 | 283 | 253 | 205 | N75x2,5x28DIN 5480-Rilsan | 110 x 6mm |
| | 34462900800 | - | 2 | 111,9 | 93 | 226 | 28 | 168 | N75x2,5x28DIN 5480-Rilsan | WITHOUT TUBE |
| | 34462900900 | - | 2 | 111,9 | 93 | 156 | 24 | 113 | N75x2,5x28DIN 5480-Rilsan | WITHOUT TUBE |

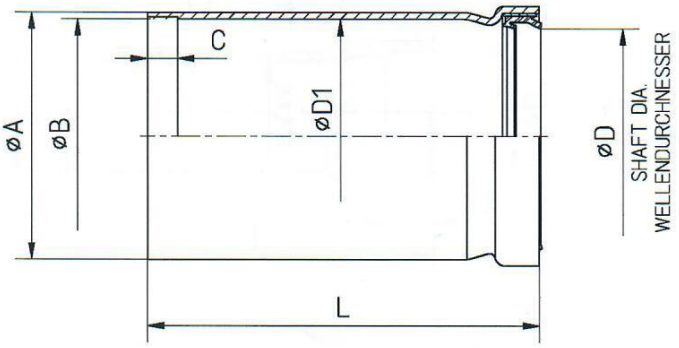


Fig. 1

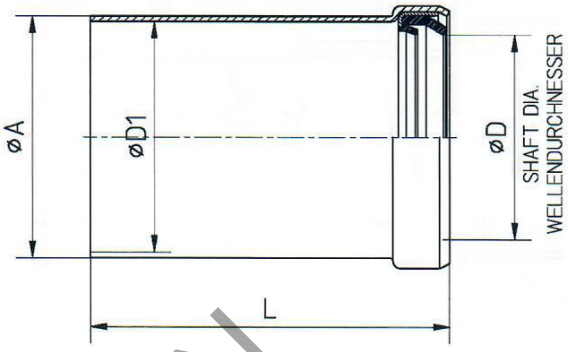


Fig. 2



**KAT-32/1** 16/12/2008

| SERIE BAUGR SERİ | NEW PART NO TEIL NR NEU YENİ PARÇA NO | REF. | FIG. | A | B | C | D | D1 | L |
|---|---|---|---|---|---|---|---|---|---|
| 1510 | 4151320050125 | - | 2 | 63,5 | - | - | 55,0 | 60,6 | 125 |
| | 4151320050130 | - | 2 | 63,5 | - | - | 55,0 | 60,6 | 130 |
| | 4151320050145 | - | 2 | 63,5 | - | - | 55,0 | 60,6 | 145 |
| 350 | 4350320090049 | - | 2 | 54,0 | - | - | 48,0 | 51,5 | 49 |
| | 4350320090110 | - | 2 | 54,0 | - | - | 48,0 | 51,5 | 110 |
| | 4350320090126 | - | 2 | 54,0 | - | - | 48,0 | 51,5 | 126 |
| | 4350320090135 | - | 2 | 54,0 | - | - | 48,0 | 51,5 | 135 |
| | 4350320090180 | - | 2 | 54,0 | - | - | 48,0 | 51,5 | 180 |
| 381 | 4381320030098 | - | 2 | 69,8 | - | - | 65,0 | 66,6 | 98 |
| | 4381320030105 | - | 2 | 69,8 | - | - | 65,0 | 66,6 | 105 |
| | 4381320040080 | - | 1 | 76,2 | 71,65 | 10 | 65,0 | 71,4 | 80 |
| | 4381320040130 | - | 1 | 76,2 | 71,65 | 10 | 65,0 | 71,4 | 130 |
| | 4381320040148 | - | 1 | 76,2 | 71,65 | 10 | 65,0 | 71,4 | 148 |
| 385 | 4385320040163 | MB: 385 411 07 083 | 1 | 92,0 | 85,8 | 13 | 81,0 | 85,6 | 163 |
| | 4385320040180 | - | 1 | 92,0 | 85,8 | 13 | 81,0 | 85,6 | 180 |
| 389 | 4389320010150 | - | 1 | 97,0 | 91,2 | 13 | 86,0 | 91,0 | 150 |
| | 4389320010180 | MB: 389 411 01 83 | 1 | 97,0 | 91,2 | 13 | 86,0 | 91,0 | 180 |
| | 4389320010210 | - | 1 | 97,0 | 91,2 | 13 | 86,0 | 91,0 | 210 |
| | 4389320050130 | MB: 389 410 01 83 | 1 | 97,0 | 91,3 | 13 | 86,0 | 91,0 | 180 |
| 395 | 4395320010170 | - | 1 | 106,0 | 99,7 | 13 | 93,0 | 100,0 | 170 |
| | 4395320020135 | - | 1 | 106,0 | 99,7 | 13 | 93,0 | 100,0 | 135 |
| | 4395320020200 | MB: 656 410 07 83 | 1 | 106,0 | 99,7 | 13 | 93,0 | 100,0 | 200 |
| | 4395320020210 | MB: 656 410 08 83 | 1 | 106,0 | 99,7 | 13 | 93,0 | 100,0 | 210 |
| | 4395320070150 | - | 1 | 106,0 | 99,7 | 13 | 95,0 | 100,0 | 150 |
| | 4395320070170 | - | 1 | 106,0 | 99,7 | 13 | 95,0 | 100,0 | 170 |
| | 4395320070185 | - | 1 | 160,0 | 99,7 | 13 | 95,0 | 100,0 | 185 |
| 424 | 4424320010152 | - | 2 | 61,0 | - | - | 56,0 | 58,0 | 152 |

## SHAFT TUBES / GELENKWELLENROHR / ŞAFT BORULARI



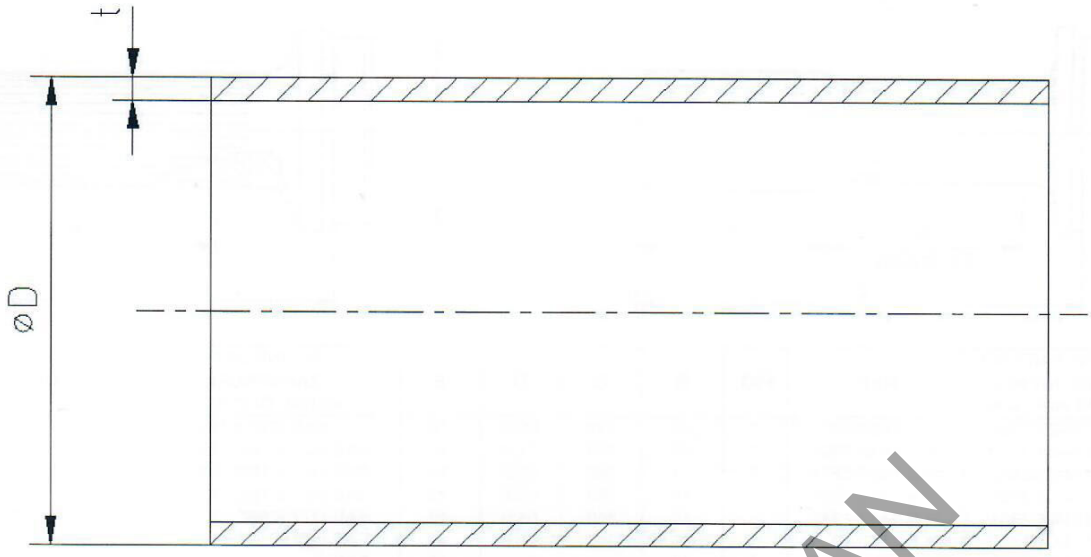


KAT-32/2 16/12/2008

| PART NO<br>TEIL NR<br>PARÇA NO | DESCRIPTION<br>BESCHREIBUNG<br>AÇIKLAMA | D | t |
|---|---|---|---|
| 20003208600 | 38 X 1,5 | 38,00 | 1,50 |
| 20003212900 | 42 X 3 | 42,00 | 3,00 |
| 20003216100 | 50 X 3 | 50,00 | 3,00 |
| 20003200700 | 2" X 0,064" | 50,80 | 1,63 |
| 20003217000 | 2" X 0,064" | 50,80 | 1,63 |
| 20003200800 | 2" X 0,095" | 50,80 | 2,41 |
| 20003209900 | 52 X 4 | 52,00 | 4,00 |
| 20003217700 | 54 X 1,2 | 54,00 | 1,20 |
| 20003219500 | 54 X 4 | 54,00 | 4,00 |
| 20003200400 | 2 1/2" X 0,064" | 63,50 | 1,63 |
| 20003200100 | 2 3/4" X 0,064" | 69,90 | 1,63 |
| 20003216200 | 70 X 3 | 70,00 | 3,00 |
| 20003213800 | 3" X 0,064" | 76,20 | 1,63 |
| 20003203800 | 3" X 0,064" | 76,20 | 1,63 |
| 20003200200 | 3" X 0,095" | 76,20 | 2,41 |
| 20003220900 | 82,6 X 2,3 | 82,60 | 2,30 |
| 20003215000 | 3 1/2" X 0,064" | 88,90 | 1,63 |
| 20003200300 | 3 1/2" X 0,095" | 88,90 | 2,41 |
| 20003220800 | 90 X 3,2 | 90,00 | 3,20 |
| 20003204900 | 90 X 3,5 | 90,00 | 3,50 |
| 20003207600 | 92 X 3 | 92,00 | 3,00 |
| 20003205100 | 92 X 5 | 92,00 | 5,00 |
| 20003213400 | 97 X 3 | 97,00 | 3,00 |
| 20003214200 | 100 X 4 | 100,00 | 4,00 |
| 20003211200 | 100 X 5 | 100,00 | 5,00 |
| 20003214000 | 100 X 5 | 100,00 | 5,00 |
| 20003205500 | 100 X 6 | 100,00 | 6,00 |
| 20003217200 | 4" X 0,064" | 101,60 | 1,63 |
| 20003200600 | 4" X 0,080" | 101,60 | 2,03 |
| 20003214900 | 102 X 2,3 | 102,00 | 2,30 |
| 20003215400 | 106 X 3 | 106,00 | 3,00 |
| 20003209400 | 110 X 6 | 110,00 | 6,00 |
| 20003214300 | 120 X 4 | 120,00 | 4,00 |
| 20003209600 | 130 X 5 | 130,00 | 5,00 |
| 20003215100 | 140 X 5 | 140,00 | 5,00 |

## SLIP STUB SHAFTS / WELLENZAPFEN / KAYICI MiLLER

Fig 1

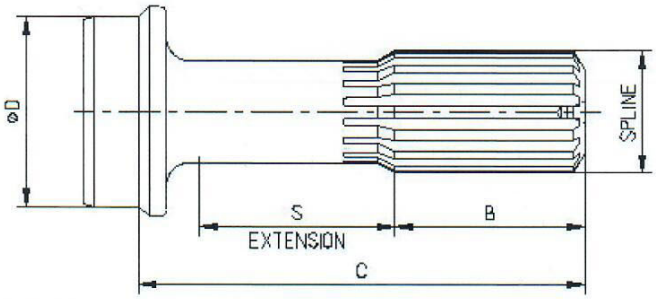


Fig 2

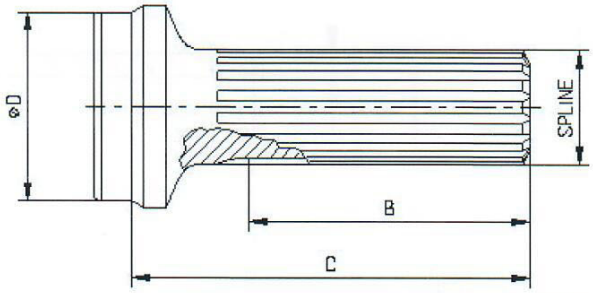


**KAT-42/1** 17/12/2008

| SERIE BAUGR SERI | NEW PART NO TEIL NR NEU YENİ PARÇA NO | REF. | FIG. | B | C | D | S | SPLINE DATA ZAHNPROFIL KANAL ÖLÇÜLERİ | TUBE O.D.xW.THICKNESS ROHRDURCHMESSERxDICKE BORU ÇAPIxET KALINLIĞI |
|---|---|---|---|---|---|---|---|---|---|
| 1140 | 31144202300 | FIAT4606767 | 1 | 45 | 146 | 66,9 | 70 | SAE Ø27 x 16C | 2,75" x 0,064" |
| | 31144203302 | H.S.1442-1901 | 1 | 44 | 104 | 47,8 | 40 | SAE Ø27 x 16C - RILSAN | 2" x 0,064" |
| | 31144203402 | H.S.1442-2531 | 1 | 44 | 104 | 46,2 | 40 | SAE Ø27 x 16C - RILSAN | 2" x 0,095" |
| | 31144203501 | H.S.1442-1921 | 1 | 44 | 104 | 60,6 | 40 | SAE Ø27 x 16C - RILSAN | 2,5" x 0,064" |
| | 31144203601 | H.S.1442-1931 | 1 | 44 | 110 | 66,9 | 40 | SAE Ø27 x 16C - RILSAN | 2,75" x 0,064" |
| | 31144203702 | H.S.1442-3271 | 1 | 80 | 146 | 66,9 | 40 | SAE Ø27 x 16C - RILSAN | 2,75" x 0,064" |
| | 31144204101 | H.S.1442-1891 | 1 | 44 | 104 | 39,9 | 40 | SAE Ø27 x 16C - RILSAN | 1,75" x 0,095" |
| 1310 | 31314202600 | - | 1 | 50 | 113 | 26,2 | 45 | SAE Ø31,75 x 16C | 1,25" x 0,120" |
| | 31314202700 | - | 1 | 50 | 113 | 39,9 | 45 | SAE Ø31,75 x 16C | 1,75" x 0,095" |
| | 31314204001 | - | 1 | 57 | 145,5 | 71,6 | 70 | SAE Ø34,9 x 16C -Rilsan | 3" x 0,095" |
| | 31314204101 | - | 1 | 54 | 148 | 66,9 | 70 | SAE Ø34,9 x 16C -Rilsan | 2,75" x 0,064" |
| | 31314204200 | - | 1 | 54 | 128 | 46,2 | 55 | SAE Ø34,9 x 16C -Rilsan | 2" x 0,095" |
| | 31314204300 | - | 1 | 54 | 131 | 73,3 | 55 | SAE Ø34,9 x 16C -Rilsan | 3" x 0,064" |
| | 31314204400 | - | 1 | 54 | 128 | 66,9 | 55 | SAE Ø34,9 x 16C -Rilsan | 2,75" x 0,064" |
| | 31314204600 | - | 1 | 54 | 128 | 58,9 | 55 | SAE Ø34,9 x 16C -Rilsan | 2,5" x 0,095" |
| | 31314204901 | - | 1 | 57 | 145,5 | 73,3 | 70 | SAE Ø34,9 x 16C -Rilsan | 3" x 0,064" |
| | 31314205000 | - | 1 | 54 | 128 | 60,6 | 55 | SAE Ø34,9 x 16C -Rilsan | 2,5" x 0,064" |
| | 31314205100 | - | 1 | 54 | 146 | 46,2 | 70 | SAE Ø34,9 x 16C -Rilsan | 2" x 0,095" |
| | 31314205300 | - | 1 | 54 | 128 | 71,6 | 55 | SAE Ø34,9 x 16C -Rilsan | 3" x 0,095" |
| | 31314205501 | - | 1 | 54 | 128 | 46,8 | 55 | SAE Ø34,9 x 16C -Rilsan | 2" x 0,083" |
| | 31314205600 | - | 1 | 54 | 131 | 72,3 | 55 | SAE Ø34,9 x 16C -Rilsan | 3" x 0,083" |
| | 31314205800 | - | 1 | 54 | 146 | 60,6 | 70 | SAE Ø34,9 x 16C -Rilsan | 2,5" x 0,064" |
| | 31314205900 | - | 1 | 54 | 128 | 45,1 | 55 | SAE Ø34,9 x 16C -Rilsan | 2" x 0,120" |
| | 31314206000 | - | 1 | 54 | 128 | 54,1 | 55 | SAE Ø34,9 x 16C -Rilsan | 60 x 3mm |
| | 31314206600 | - | 1 | 57 | 132 | 46,7 | 55 | SAE Ø34,9 x 16C -Rilsan | 2" x 0,080" |
| | 31314206700 | - | 1 | 51 | 122 | 46,1 | 55 | SAE Ø34,9 x 16C -Rilsan | 54 x 4mm |
| 1410 | 31414203101 | - | 1 | 61 | 183 | 71,6 | 90 | SAE Ø38,1 x 16C -Rilsan | 3" x 0,095" |
| | 31414203301 | H.S.4142-3051 | 1 | 76 | 153 | 45,6 | 57 | SAE Ø38,1 x 16C -Rilsan | 2" x 0,109" |
| | 31414203401 | H.S.4142-3101 | 1 | 76 | 177 | 45,6 | 82 | SAE Ø38,1 x 16C -Rilsan | 2" x 0,109" |
| | 31414203700 | - | 1 | 61 | 145 | 73,3 | 57 | SAE Ø38,1 x 16C -Rilsan | 3" x 0,064" |
| | 31414203901 | - | 1 | 61 | 156 | 71,6 | 70 | SAE Ø38,1 x 16C -Rilsan | 3" x 0,095" |
| | 31414204201 | - | 1 | 61 | 156 | 84,3 | 70 | SAE Ø38,1 x 16C -Rilsan | 3,5" x 0,095" |
| | 31414205501 | - | 1 | 61 | 144 | 58,6 | 57 | SAE Ø38,1 x 16C -Rilsan | 2,5" x 0,095" |
| | 31414205601 | - | 1 | 63 | 147 | 59,0 | 57 | SAE Ø38,1 x 16C -Rilsan | 2,5" x 0,088" |
| | 31414205800 | - | 1 | 50 | 137 | 84,6 | 53 | SAE Ø38,1 x 16C -Rilsan | 3,5" x 0,095" |
| | 31414206001 | - | 1 | 76 | 153 | 45,2 | 57 | SAE Ø38,1 x 16C -Rilsan | - |
| 1480 | 31484200100 | - | 1 | 73 | 163 | 71,6 | 63 | SAE 1,5718" x 16C -Rilsan | 3" x 0,095" |
| | 31484200200 | - | 1 | 80 | 177 | 86,0 | 65 | SAE 1,5718" x 16C -Rilsan | 3,5" x 0,064" |
| | 31484200300 | - | 1 | 70 | 160 | 85,0 | 63 | SAE 1,5718" x 16C -Rilsan | 3,5" x 0,083" |
| | 31484200500 | - | 1 | 76,2 | 171,5 | 82,2 | 60 | SAE 1,5718" x 16C -Rilsan | 3,5" x 0,130" |
| 1510 | 31514201100 | - | 2 | 125 | 185 | 84,3 | 70 | SAE Ø44,45 x 16C | 3,5" x 0,095" |
| | 31514201201 | - | 1 | 63 | 163 | 84,3 | 70 | SAE Ø44,45 x 16C -Rilsan | 3,5" x 0,095" |
| | 31514201300 | H.S.5142-1791 | 1 | 75 | 163 | 71,6 | 60 | SAE Ø44,45 x 16C | 3" x 0,095" |
| | 31514201400 | - | 1 | 70 | 163 | 71,6 | 63 | SAE Ø44,45 x 16C -Rilsan | 3" x 0,095" |
| | 31514201600 | - | 1 | 63 | 163 | 71,6 | 70 | SAE Ø44,45 x 16C -Rilsan | 3" x 0,095" |
| 1600 | 31604200502 | H.S.6042-2671 | 1 | 90 | 267 | 84,3 | 130 | SAE Ø50,8 x 16C | 3,5" x 0,095" |
| | 31604201000 | - | 1 | 90 | 232 | 83,4 | 110 | SAE Ø50,8 x 16C | 90 x 3,5mm |
| | 31604201800 | - | 2 | 200 | 251 | 84,3 | - | SAE Ø50,8 x 16C | 3,5" x 0,095" |
| 1700 | 31704201500 | H.S.7042-301 | 1 | 98 | 210 | 83,2 | 75 | SAE Ø63,5 x 10C | 3,5" x 0,120" |
| | 31704201700 | - | 1 | 171 | 244 | 72,0 | - | W65x2,5x24 DIN5480 | - |
| | 31704202200 | D.S.6-40-661 | 1 | 101 | 268 | 95,0 | 134 | SAE Ø63,5 x 16C -Rilsan | 4" x 0,134" |
| | 31704202300 | D.S.6-40-541 | 1 | 101 | 235 | 95,0 | 98 | SAE Ø63,5 x 16C -Rilsan | 4" x 0,134" |
| | 31704202500 | H.S.7042-1241 | 1 | 98 | 238 | 83,2 | 106 | SAE Ø63,5 x 10C | 3,5" x 0,120" |
| | 31704203000 | - | 1 | 98 | 238 | 82,1 | 106 | SAE Ø63,5 x 10C | 92 x 5mm |
| 1800 | 31804200200 | H.S.8042-071 | 1 | 111 | 233 | 80,0 | 82 | SAE Ø76,2 x 10C | 3,5" x 0,188" |
| | 31804200400 | H.S.8042-301 | 1 | 114 | 282 | 80,0 | 130 | SAE Ø76,2 x 10C | 3,5" x 0,188" |
| | 31804201900 | - | 1 | 111 | 239 | 98,1 | 87 | SAE Ø76,2 x 10C | 110x6 mm |
| | 31804202000 | - | 1 | 114 | 288 | 98,1 | 130 | SAE Ø76,2 x 10C | 110x6 mm |

## YOKE SHAFTS / GABELWELLEN / ÇATALLI MİLLER



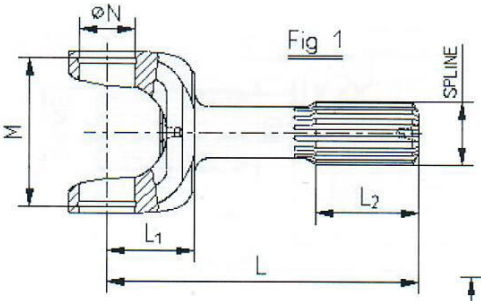


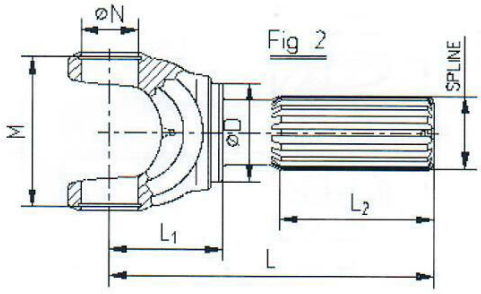


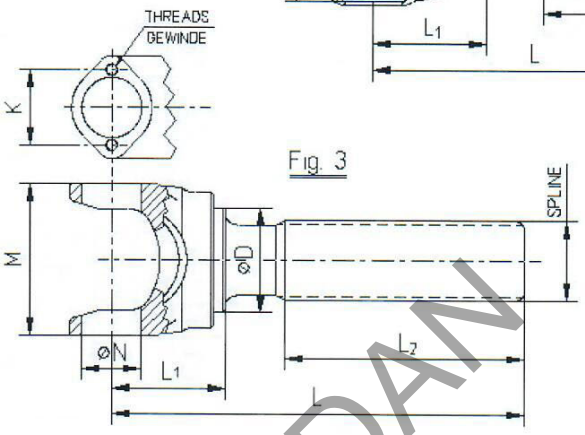


KAT-43

18/12/2008

| SERIE BAUGR SERİ | NEW PART NO TEIL NR NEU YENİ PARÇA NO | REF. | FİG. | ANGLE WINKEL AÇI | L | L1 | L2 | M | N | D | K | SPLINE DATA ZAHNPROFIL KANAL ÖLÇÜLERI | THREADS GEW INDE VİDA |
|---|---|---|---|---|---|---|---|---|---|---|---|---|---|
| 1140 | 31144301500 | - | 1 | 20° | 135 | 38 | 44 | 64,2 | 23,8 | - | - | SAE 1 1/16"x16C | - |
| | 31144301900 | - | 1 | 17° | 110 | 30 | 44 | 64,2 | 23,8 | - | - | SAE 1 1/16"x16C | - |
| | 31144303200 | - | 1 | 20° | 135 | 38 | 44 | 64,2 | 23,8 | - | - | SAE 1 1/16"X16C RILSAN | - |
| 1310 | 31314301900 | - | 1 | 30° | 167 | 47 | 51 | 84,7 | 27,0 | - | - | SAE 1 3/8"x16C RILSAN | - |
| | 31314302000 | - | 1 | 20° | 125 | 40 | 51 | 84,7 | 27,0 | - | - | SAE 1 3/8"x16C RILSAN | - |
| | 31314302100 | - | 1 | 20° | 137 | 40 | 51 | 84,7 | 27,0 | - | - | SAE 1 3/8"x16C RILSAN | - |
| | 31314302200 | - | 1 | 20° | 174 | 57 | 51 | 84,7 | 27,0 | - | - | SAE 1 3/8"x16C | - |
| | 31314302300 | - | 1 | 20° | 143 | 40 | 45 | 84,7 | 27,0 | - | - | SAE 1 3/8"x16C RILSAN | - |
| | 31314302400 | - | 1 | 20° | 174 | 40 | 61 | 84,7 | 27,0 | - | - | SAE 1 1/2"x16C RILSAN | - |
| | 31314302600 | - | 1 | 20° | 164 | 47 | 51 | 84,7 | 27,0 | - | - | SAE 1 3/8"X16c | - |
| | 31314302700 | - | 1 | 20° | 112 | 37 | 37 | 84,7 | 27,0 | - | - | SAE 1 3/8"x16C RILSAN | - |
| | 31314303100 | - | 2 | 20° | 129 | 40 | 54 | 84,7 | 27,0 | 46 | - | SAE 1 3/8"x16C RILSAN | - |
| | 31314303300 | - | 1 | 22° | 116 | 38 | 40 | 84,7 | 27,0 | - | - | SAE 1 3/8"x16C RILSAN | - |
| 1410 | 31414300200 | - | 1 | 20° | 168 | 44 | 60 | 109,2 | 30,1 | - | - | SAE 1 1/2"x16C | - |
| | 31414301300 | - | 1 | 20° | 168 | 47 | 57 | 109,2 | 30,1 | - | - | SAE 1 1/2"x16C RILSAN | - |
| | 31414301400 | - | 1 | 20° | 126 | 44 | 51 | 109,2 | 30,1 | - | - | SAE 1 1/2"x16C RILSAN | - |
| | 31414301500 | - | 1 | 20° | 145 | 44 | 51 | 109,2 | 30,1 | - | - | SAE 1 1/2"x16C RILSAN | - |
| 1480 | 31484300100 | - | 1 | 20° | 185 | 48 | 58 | 109,2 | 34,9 | - | - | SAE 1 3/4"x16C RILSAN | - |
| | 31484300300 | - | 1 | 20° | 166 | 48 | 58 | 109,2 | 34,9 | - | - | SAE 1 3/4"x16C RILSAN | - |
| | 31484300400 | - | 1 | 20° | 144 | 42 | 51 | 109,2 | 34,9 | - | - | SAE 1 3/4"x16C RILSAN | - |
| | 31484300700 | - | 2 | 25° | 223 | 53 | 108 | 109,2 | 34,9 | 60,6 | - | W 45x2,5x16 DIN5480 | - |
| | 31484300800 | - | 1 | 20° | 180 | 48 | 70 | 109,2 | 34,9 | - | - | SAE 1 3/4"x16C RILSAN | - |
| | 31484301000 | - | 2 | 15° | 159 | 60 | 57 | 109,2 | 34,9 | 73,0 | - | T19;10/20;30° RILSAN | - |
| | 31484301200 | - | 2 | 45° | 360 | 71 | 92 | 109,2 | 34,9 | 72,0 | - | SAE 1 3/4"x16C RILSAN | - |
| | 31484301400 | - | 2 | 25° | 270 | 89 | 138 | 109,2 | 34,9 | 71,7 | - | W55x2,5x20 DIN5480 | - |
| 1510 | 31514300100 | - | 1 | 20° | 170 | 60 | 66 | 119,3 | 39,6 | - | - | SAE 1 3/4"x16C | - |
| | 31514300700 | - | 1 | 20° | 171 | 60 | 59 | 119,3 | 39,6 | - | - | SAE 1 3/4"x16C | - |
| | 31514301500 | - | 1 | 20° | 171 | 60 | 59 | 119,3 | 39,6 | - | - | SAE 1 3/4"x16C RILSAN | - |
| 1630 | 31634300800 | - | 2 | 35° | 308 | 80 | 180 | 119,3 | 39,6 | 71,7 | - | W 55x2,5x20 DIN5480 | - |
| | 31634301200 | - | 2 | 35° | 230 | 80 | 180 | 119,3 | 39,6 | 71,7 | - | W 55x2,5x20 DIN5480 | - |
| | 31634301300 | - | 2 | 35° | 230 | 80 | 180 | 119,3 | 39,6 | 71,7 | - | W 55x2,5x20 DIN5480 | - |
| 1730 | 31734300700 | 36874070000000261 | 2 | 27° | 259 | 80 | 131 | 138,4 | 47,6 | 84 | - | WA62x1,75x34x25° | - |
| | 31734300800 | 36874070000000234 | 2 | 27° | 234 | 80 | 106 | 138,4 | 47,6 | 84 | - | WA62x1,75x34x25° | - |
| | 31734300900 | 36874077000000301 | 2 | 44° | 301 | 97 | 156 | 138,4 | 47,6 | 84 | - | WA62x1,75x34x25° | - |
| | 31734301000 | 36874077000000325 | 2 | 44° | 325 | 97 | 180 | 138,4 | 47,6 | 84 | - | WA62x1,75x34x25° | - |
| | 31734301100 | 36874077000000341 | 2 | 44° | 341 | 97 | 196 | 138,4 | 47,6 | 84 | - | WA62x1,75x34x25° | - |
| | 31734301200 | 36874077000000348 | 2 | 44° | 346 | 97 | 201 | 138,4 | 47,6 | 84 | - | WA62x1,75x34x25° | - |
| 287 | 32874300100 | - | 2 | 35° | 257 | 60 | 157 | 85,1 | 30,0 | 51,0 | - | W38x2x18 DIN5480 | - |
| 350 | 33504300100 | - | 2 | 15° | 250 | 79 | 130 | 92,7 | 38,0 | 51,6 | - | W 38x2x18 DIN5480 | - |
| 381 | 33814300100 | MB: 3814111205 | 2 | 25° | 303 | 82 | 178 | 109,4 | 42,0 | 71,7 | - | W 55x2,5x20 DIN5480 | - |
| | 33814300200 | - | 2 | 25° | 205 | 70 | 92 | 109,4 | 42,0 | 71,7 | - | W 55x2,5x20 DIN5480 | - |

# YOKE SHAFTS / GABELWELLEN / ÇATALLI MİLLER

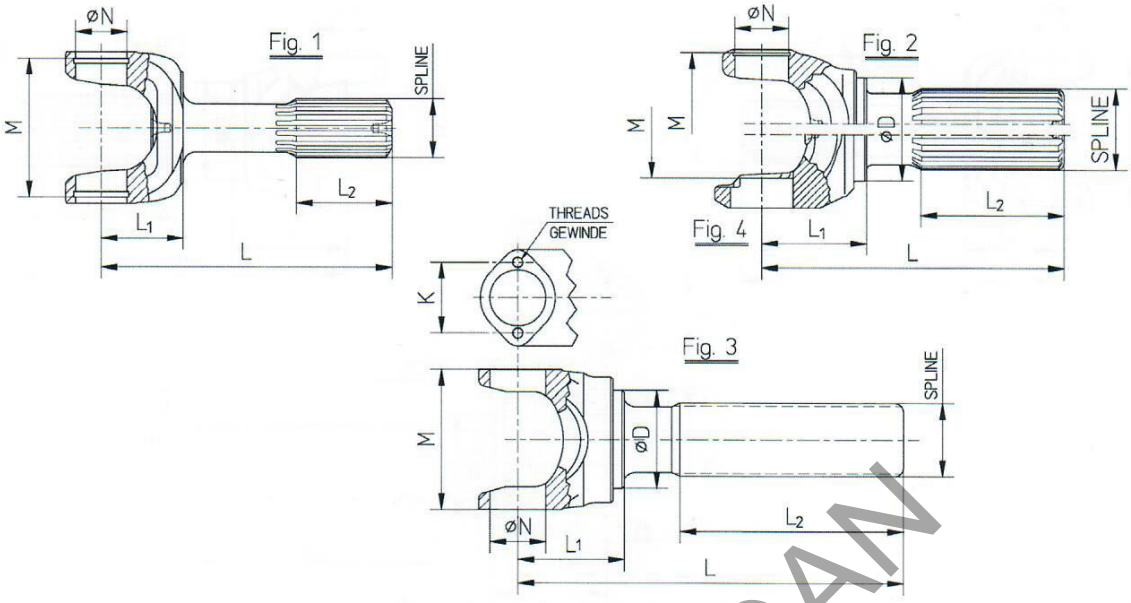


KAT-43 18/12/2008

| SERIE BAUGR SERİ | NEW PART NO TEIL NR NEU YENİ PARÇA NO | REF. | FİG. | ANGLE WINKEL AÇI | L | L1 | L2 | M | N | D | K | SPLINE DATA ZAHNPROFIL KANAL ÖLÇÜLERI | THREADS GEW INDE VİDA |
|---|---|---|---|---|---|---|---|---|---|---|---|---|---|
| 385 | 33854300300 | M.B.3854111905 | 2 | 24° | 340 | 94 | 197 | 129,2 | 48,0 | 85,9 | - | W 65x2,5x24 DIN5480 | - |
| | 33854300400 | - | 2 | 24° | 340 | 94 | 197 | 129,2 | 48,0 | 85,9 | - | W65x2,5x24 DIN5480 | - |
| | 33854300600 | - | 2 | 24° | 290 | 79 | 155 | 129,2 | 48,0 | 85,9 | - | W65x2,5x24 DIN5480 | - |
| | 33854300700 | - | 2 | 24° | 260 | 80 | 124 | 129,2 | 48,0 | 85,9 | - | W 65x2,5x24 DIN5480 | - |
| | 33854300800 | - | 2 | 24° | 273 | 93 | 131 | 129,2 | 48,0 | 85,9 | - | W 65x2,5x24 DIN5480 | - |
| | 33854300900 | - | 2 | 24° | 302 | 94 | 159 | 129,2 | 48,0 | 85,9 | - | W 65x2,5x24 DIN5480 | - |
| | 33854301000 | - | 2 | 24° | 245 | 80 | 109 | 129,2 | 48,0 | 85,9 | - | W 65x2,5x24 DIN5480 | - |
| 389 | 33894300100 | M.B.3894111505 | 2 | 30° | 361 | 110 | 202 | 138,9 | 53,0 | 91,1 | - | W 72x2,5x27 DIN5480 | - |
| | 33894300200 | M.B.3894111205 | 2 | 30° | 401 | 110 | 242 | 138,9 | 53,0 | 91,1 | - | W 72x2,5x27 DIN5480 | - |
| | 33894300400 | M.B.3894111705 | 2 | 30° | 335 | 110 | 176 | 138,9 | 53,0 | 91,1 | - | W 72x2,5x27 DIN5480 | - |
| | 33894300500 | M.B.3894112005 | 2 | 30° | 386 | 110 | 227 | 138,9 | 53,0 | 91,1 | - | W 72x2,5x27 DIN5480 | - |
| | 33894300800 | - | 2 | 44° | 401 | 100 | 252 | 138,9 | 53,0 | 91,1 | - | W 72x2,5x27 DIN5480 | - |
| | 33894301000 | - | 2 | 44° | 391 | 100 | 242 | 138,9 | 53,0 | 91,1 | - | W 72x2,5x27 DIN5480 | - |
| | 33894301100 | - | 2 | 44° | 325 | 100 | 185 | 138,9 | 53,0 | 91,1 | - | W 72x2,5x27 DIN5480 | - |
| | 33894301200 | - | 2 | 44° | 380 | 100 | 231 | 138,9 | 53,0 | 91,1 | - | W 72x2,5x27 DIN5480 | - |
| | 33894301300 | - | 2 | 44° | 288 | 98 | 141 | 138,9 | 53,0 | 85,9 | - | W 65x2,5x24 DIN5480 | - |
| | 33894301500 | - | 2 | 25° | 234 | 84 | 105 | 138,9 | 53,0 | 85,9 | - | T31;12/24;30° | - |
| | 33894301600 | - | 2 | 25° | 218 | 84 | 89 | 138,9 | 53,0 | 85,9 | - | T31;12/24;30° | - |
| 395 | 33954300100 | MB: 3954110205 | 2 | 25° | 430 | 112 | 272 | 155,9 | 57,0 | 100,1 | - | W 80x2,5x30 DIN5480 | - |
| | 33954300500 | - | 2 | 25° | 280 | 98 | 136 | 155,9 | 57,0 | 100,1 | - | W 80x2,5x30 DIN5480 | - |
| | 33954300700 | - | 2 | 25° | 360 | 112 | 202 | 155,9 | 57,0 | 100,1 | - | W 80x2,5x30 DIN5480 | - |
| | 33954301000 | 36875570000000294 | 2 | 27° | 291 | 95 | 144 | 155,9 | 57,0 | 105,0 | - | WA78x2,0x38x25° | - |
| 420 | 34204300100 | - | 1 | 25° | 186 | 47 | 65 | 84,7 | 30,2 | - | - | SAE 1 1/2"x16C RILSAN | - |
| | 34204300200 | - | 2 | 25° | 187 | 51,5 | 95 | 84,7 | 30,2 | 51,6 | - | W 38x2x18 DIN5480 | - |
| | 34204300300 | - | 2 | 35° | 257 | 60 | 157 | 84,7 | 30,2 | 51,6 | - | W 38x2x18 DIN5480 | - |
| | 34204300700 | - | 2 | 35° | 227 | 60 | 127 | 84,7 | 30,2 | 51,1 | - | W 38x2x18 DIN5480 | - |
| 424 | 34244300100 | - | 2 | 35° | 307 | 65 | 193 | 100,0 | 35,0 | 60,3 | - | W45x2,5x16 DIN5480 | - |
| 434 | 34344300100 | - | 2 | 44° | 327 | 96 | 182 | 137,0 | 52,0 | 85,9 | - | W 65x2,5x24 DIN5480 | - |
| | 34344300200 | - | 2 | 44° | 341 | 97 | 195 | 137,0 | 52,0 | 85,9 | - | W 65x2,5x24 DIN5480 | - |
| | 34344300300 | - | 2 | 44° | 401 | 100 | 252 | 137,0 | 52,0 | 91,1 | - | W 72x2,5x27 DIN5480 | - |
| | 34344300400 | - | 2 | 32° | 401 | 110 | 242 | 137,0 | 52,0 | 91,1 | - | W 72x2,5x27 DIN5480 | - |
| | 34344300500 | - | 2 | 44° | 327 | 96 | 182 | 137,0 | 52,0 | 91,1 | - | W 72x2,5x27 DIN5480 | - |
| 445 | 34454300100 | - | 2 | 27° | 365 | 95 | 221 | 151,3 | 52,0 | 97,7 | - | W 75x2,5x28 DIN5480 | - |
| | 34454300200 | - | 2 | 27° | 263 | 90 | 123 | 151,3 | 52,0 | 100,1 | - | W 75x2,5x28 DIN5480 | - |
| | 34454300300 | 36874570000000273 | 2 | 30° | 270 | 86 | 135 | 151,3 | 52,0 | 91 | - | WA 68x1,75x38x25° | - |
| | 34454300400 | 36874570005000273 | 2 | 30° | 270 | 70 | 135 | 151,3 | 52,0 | 75 | - | WA 68x1,75x38x25° | - |
| | 34454300500 | 36874570000000240 | 2 | 27° | 243 | 86 | 108 | 151,3 | 52,0 | 92 | - | WA 68x1,75x38x25° | - |
| | 34454300600 | 36874570000000213 | 2 | 27° | 213 | 86 | 78 | 151,3 | 52,0 | 92 | - | WA 68x1,75x38x25° | - |
| | 34454300700 | 36874577000000361 | 2 | 44° | 358 | 104 | 205 | 151,3 | 52,0 | 92 | - | WA 68x1,75x38x25° | - |
| | 34454300800 | 36874570005100325 | 2 | 27° | 325 | 70 | 190 | 151,3 | 52,0 | 75 | - | WA 68x1,75x38x25° | - |
| | 34454300900 | 56874571000200405 | 2 | 25° | 405 | 86 | 149 | 151,3 | 52,0 | 84 | - | WA 68x1,75x38x25° | - |
| 446 | 34464300100 | - | 2 | 27° | 365 | 95 | 221 | 151,3 | 53,0 | 97,7 | - | W 75x2,5x28 DIN5480 | - |
| | 34464300200 | - | 2 | 30° | 274 | 90 | 135 | 151,3 | 53,0 | 100,1 | - | W 80x2,5x30 DIN5480 | - |
| | 34464300300 | - | 2 | 30° | 325 | 95 | 181 | 151,3 | 53,0 | 97,6 | - | W 75x2,5x28 DIN5480 | - |
| | 34464300400 | - | 2 | 30° | 315 | 90 | 176 | 151,3 | 53,0 | 100,1 | - | W 75x2,5x28 DIN5480 | - |
| | 34464300600 | - | 2 | 30° | 258 | 90 | 119 | 151,3 | 53,0 | 97,6 | - | W 75x2,5x28 DIN5480 | - |
| 468 | 34684300100 | MB: 6564110105 | 4 | 22° | 358 | 112 | 195 | 95,0 | 68,0 | 100,1 | - | W 80x2,5x30 DIN5480 | - |

## YOKE SHAFTS ASSY / GABELWELLEN / ÇATALLI MİL KOMPLELERI



FIG 1
COVER TUBE TYPE FEMALE
SPLINE RILSAN COATED

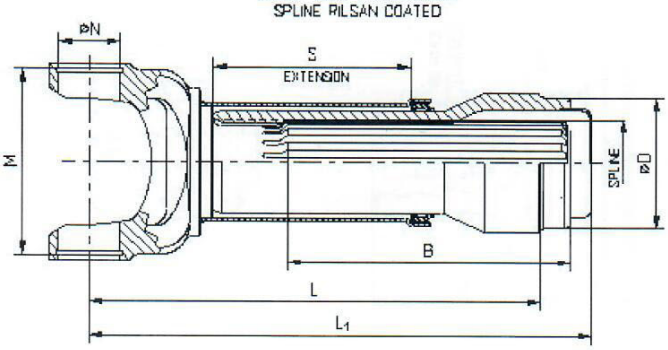


FIG. 2
LIP SEAL TYPE MALE
SPLINE RILSAN COATED

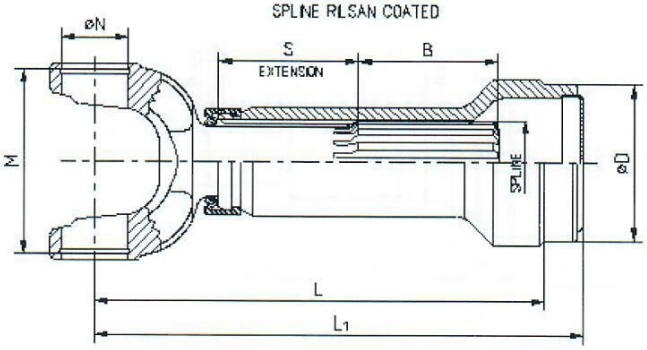


**KAT-43K** **18/12/2008**

| SERIE BAUGR SERİ | NEW PART NO TEIL NR NEU YENİ PARÇA NO | FİG. | ANGLE WINKEL AÇI | M | N | L | S | B | L1 | D | TUBE O.D.xW.THICKNESS ROHRDURCHMESSERxDICKE BORU ÇAPIxET KALINLIGI | SPLINE DATA ZAHNPROFIL KANAL ÖLÇÜLERI |
|---|---|---|---|---|---|---|---|---|---|---|---|---|
| 1310 | 41314301901 | 2 | 30° | 84,7 | 27,0 | 185 | 60 | 50,8 | 200 | 46,2 | 2" x 0,095" | SAE 1 3/8"x16C RILSAN |
| | 41314302401 | 2 | 20° | 84,7 | 27,0 | 198 | 60 | 61,0 | 213 | 73,3 | 3" x 0,064" | SAE 1 1/2"x16C RILSAN |
| | 41314302402 | 2 | 20° | 84,7 | 27,0 | 198 | 60 | 61,0 | 213 | 71,6 | 3" x 0,095" | SAE 1 1/2"x16C RILSAN |
| 1480 | 41484300701 | 1 | 25° | 109,2 | 34,9 | 217 | 100 | 108 | 234 | 84,1 | 90 x 3mm | W 45x2,5x16 DIN5480 RILSAN |
| | 41484300702 | 1 | 25° | 109,2 | 34,9 | 217 | 100 | 108 | 234 | 84,3 | 3 1/2" x 0,095" | W 45x2,5x16 DIN5480 RILSAN |
| | 41484300703 | 1 | 25° | 109,2 | 34,9 | 228 | 115 | 108 | 245 | 64,1 | 70 x 3mm | W 45x2,5x16 DIN5480 RILSAN |
| | 41484300704 | 1 | 25° | 109,2 | 34,9 | 217 | 100 | 108 | 234 | 71,7 | 3" x 0,095" | W 45x2,5x16 DIN5480 RILSAN |
| 1630 | 41634300801 | 1 | 35° | 119,3 | 39,6 | 293 | 110 | 191 | 324 | 83,3 | 90 x 3,5mm | W 55x2,5x20 DIN5480 |
| | 41634300802 | 1 | 35° | 119,3 | 39,6 | 293 | 110 | 191 | 324 | 84,3 | 3 1/2" x 0,095" | W 55x2,5x20 DIN5480 |
| 287 | 42874300103 | 1 | 35° | 84,9 | 30,0 | 217 | 100 | 157 | 233 | 44,1 | 52 x 4mm | W 38x2x18 DIN5480 RILSAN |
| | 42874300104 | 1 | 35° | 84,9 | 30,0 | 209 | 85 | 157 | 225 | 73,3 | 3" x 0,064" | W 38x2x18 DIN5480 RILSAN |
| | 42874300105 | 1 | 35° | 84,9 | 30,0 | 209 | 85 | 157 | 225 | 71,7 | 3" x 0,095" | W 38x2x18 DIN5480 RILSAN |
| | 42874300106 | 1 | 35° | 84,9 | 30,0 | 220 | 110 | 157 | 237 | 71,7 | 3" x 0,095" | W 38x2x18 DIN5480 RILSAN |
| | 42874300108 | 1 | 35° | 84,9 | 30,0 | 217 | 110 | 157 | 233 | 44,1 | 50 x 3mm | W 38x2x18 DIN5480 RILSAN |
| | 42874300109 | 1 | 35° | 84,9 | 30,0 | 250 | 140 | 157 | 267 | 71,7 | 3" x 0,095" | W 38x2x18 DIN5480 RILSAN |
| | 42874300110 | 1 | 35° | 84,9 | 30,0 | 209 | 85 | 157 | 225 | 66,6 | 70 x 2mm | W 38x2x18 DIN5480 RILSAN |
| 350 | 43504300103 | 1 | 35° | 92,7 | 38,0 | 237 | 100 | 130 | 260 | 44,1 | 52 x 4mm | W38x2x18 DIN5480 |
| | 43504300104 | 1 | 35° | 92,7 | 38,0 | 229 | 85 | 130 | 248 | 73,3 | 3" x 0,064" | W38x2x18 DIN5480 |
| | 43504300105 | 1 | 35° | 92,7 | 38,0 | 229 | 85 | 130 | 248 | 71,6 | 3 1/2" x 0,095" | W38x2x18 DIN5480 |
| | 43504300108 | 1 | 35° | 92,7 | 38,0 | 237 | 110 | 130 | 253 | 44,1 | 50 x 3mm | W38x2x18 DIN5480 |
| 381 | 43814300101 | 1 | 25° | 109,4 | 42,0 | 295 | 110 | 178 | 326 | 85,1 | 90 x 2,5mm | W55x2,5x20 DIN5480 |
| | 43814300103 | 1 | 25° | 109,4 | 42,0 | 295 | 110 | 178 | 326 | 83,4 | 90 x 3,5mm | W55x2,5x20 DIN5480 |
| | 43814300104 | 1 | 25° | 109,4 | 42,0 | 295 | 110 | 178 | 326 | 84,4 | 3 1/2" x 0,095" | W55x2,5x20 DIN5480 |
| | 43814300106 | 1 | 25° | 109,4 | 42,0 | 275 | 110 | 178 | 317 | 71,6 | 3" x 0,095" | W55x2,5x20 DIN5480 |
| 385 | 43854300301 | 1 | 25° | 129,2 | 48,0 | 327 | 130 | 197 | 358 | 82,1 | 92 x 5mm | W65x2,5x24 DIN5480 |
| | 43854300303 | 1 | 25° | 129,2 | 48,0 | 327 | 130 | 197 | 358 | 79,1 | 92 x 6,5mm | W65x2,5x24 DIN5480 |
| | 43854300304 | 1 | 25° | 129,2 | 48,0 | 367 | 150 | 197 | 398 | 82,1 | 92 x 5mm | W65x2,5x24 DIN5480 |
| 389 | 43894300101 | 1 | 30° | 138,9 | 53,0 | 373 | 130 | 202 | 415 | 90,1 | 100 x 5mm | W72x2,5x27 DIN5480 |
| | 43894300103 | 1 | 30° | 138,9 | 53,0 | 358 | 130 | 202 | 400 | 90,1 | 100 x 5mm | W72x2,5x27 DIN5480 |
| | 43894300201 | 1 | 30° | 138,9 | 53,0 | 373 | 150 | 242 | 415 | 90,1 | 100 x 5mm | W72x2,5x27 DIN5480 |
| | 43894300203 | 1 | 30° | 138,9 | 53,0 | 393 | 180 | 242 | 435 | 90,1 | 100 x 5mm | W72x2,5x27 DIN5480 |
| | 43894300801 | 1 | 44° | 138,9 | 53,0 | 363 | 150 | 252 | 390 | 90,1 | 100 x 5mm | W72x2,5x27 DIN5480 |
| | 43894300802 | 1 | 44° | 138,9 | 53,0 | 383 | 180 | 252 | 425 | 90,1 | 100 x 5mm | W72x2,5x27 DIN5480 |
| | 43894301001 | 1 | 44° | 138,9 | 53,0 | 363 | 150 | 242 | 405 | 90,1 | 100 x 5mm | W72x2,5x27 DIN5480 |
| | 43894301002 | 1 | 44° | 138,9 | 53,0 | 383 | 180 | 242 | 425 | 90,1 | 100 x 5mm | W72x2,5x27 DIN5480 |
| 395 | 43954300101 | 1 | 25° | 155,9 | 57,0 | 405 | 180 | 272 | 452 | 98,1 | 110 x 6mm | W80x2,5x30 DIN5480 |
| | 43954300102 | 1 | 25° | 155,9 | 57,0 | 362 | 160 | 272 | 388 | 108,1 | 120 x 6mm | W80x2,5x30 DIN5480 |
| 420 | 44204300101 | 2 | 25° | 84,7 | 30,2 | 207 | 60 | 65 | 225 | 73,3 | 3" x 0,064" | SAE 1 1/2" x 16C RILSAN |
| | 44204300102 | 2 | 25° | 84,7 | 30,2 | 207 | 60 | 65 | 225 | 71,6 | 3" x 0,095" | SAE 1 1/2" x 16C RILSAN |
| | 44204300201 | 1 | 25° | 84,7 | 30,2 | 208,5 | 100 | 85 | 232 | 44,1 | 52 x 4mm | W38x2x18 DIN5480 |
| | 44204300203 | 1 | 25° | 84,7 | 30,2 | 200,5 | 80 | 85 | 220 | 73,3 | 3" x 0,064" | W38x2x18 DIN5480 |
| | 44204300204 | 1 | 25° | 84,7 | 30,2 | 200,5 | 80 | 85 | 220 | 71,6 | 3" x 0,095" | W38x2x18 DIN5480 |
| 424 | 44244300101 | 1 | 35° | 100,0 | 35,0 | 240 | 120 | 193 | 257 | 64,1 | 70 x 3mm | W45x2,5x16 DIN5480 |
| | 44244300103 | 1 | 35° | 100,0 | 35,0 | 229 | 110 | 193 | 246 | 84,3 | 3 1/2" x 0,095" | W45x2,5x16 DIN5481 |
| | 44244300104 | 1 | 35° | 100,0 | 35,0 | 229 | 110 | 193 | 246 | 84,1 | 90 x 3mm | W45x2,5x16 DIN5482 |
| 434 | 44344300201 | 1 | 44° | 137 | 52 | 330 | 130 | 195 | 361 | 82,1 | 92 x 5mm | W65x2,5x24 DIN5480 |
| | 44344300202 | 1 | 44° | 137 | 52 | 330 | 130 | 195 | 347 | 79,2 | 92 x 6,5mm | W65x2,5x24 DIN5480 |
| | 44344300301 | 1 | 44° | 137 | 52 | 363 | 150 | 252 | - | 90,1 | 100 x 5mm | W72x2,5x27 DIN5480 |
| | 44344300302 | 1 | 44° | 137 | 52 | 383 | 180 | 252 | - | 90,1 | 100 x 5mm | W72x2,5x27 DIN5480 |
| | 44344300401 | 1 | 44° | 137 | 52 | 373 | 150 | 252 | - | 90,1 | 100 x 5mm | W72x2,5x27 DIN5480 |
| | 44344300402 | 1 | 44° | 137 | 52 | 393 | 180 | 252 | - | 90,1 | 100 x 5mm | W72x2,5x27 DIN5480 |
| 445 | 44454300101 | 1 | 27° | 151,2 | 52 | 345 | 180 | 223 | 378 | 102,1 | 120 x 4mm | W75x2,5x28 DIN5480 |
| | 44454300102 | 1 | 27° | 151,2 | 52 | 275 | 110 | 223 | 295 | 102,1 | 120 x 4mm | W75x2,5x28 DIN5481 |
| 446 | 44464300101 | 1 | 27° | 151,2 | 53 | 345 | 180 | 223 | 378 | 102,1 | 120 x 4mm | W75x2,5x28 DIN5480 |
| 468 | 44684300101 | 1 | 22° | (95) | 68 | 348 | 110 | 195 | 367 | 82,1 | 110 x 6mm | W80x2,5x30 DIN5480 |
| | 44684300102 | 1 | 22° | (95) | 68 | 370 | 110 | 195 | 389 | 79,2 | 140 x 5mm | W80x2,5x30 DIN5480 |

# MIDSHIP STUP SHAFTS / LAGERZAPFEN / ARAYATAK MİLLERİ

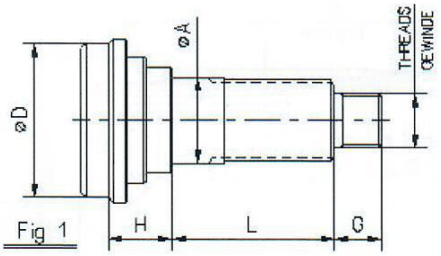


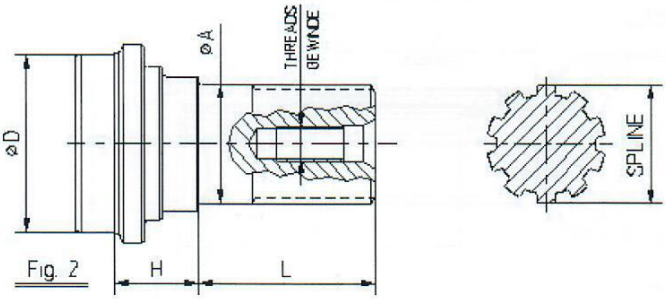


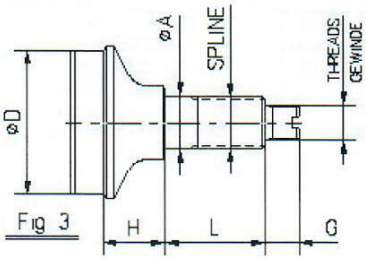


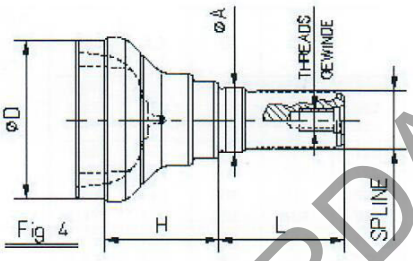


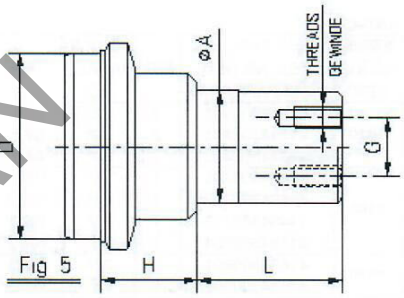




KAT-57/1 — 18/12/2008

| SERIE BAUGR SERİ | NEW PART NO TEIL NR NEU YENİ PARÇA NO | REF. | FIG. | A | D | G | H | L | SPLINE DATA ZAHNPROFIL KANAL ÖLÇÜLERİ | TUBE O.D.x THICK. ROHRDURCHM.xDICKE BORU ÇAPIxET KAL. | THREADS GEWINDE VİDA |
|---|---|---|---|---|---|---|---|---|---|---|---|
| 1140 | 31145701903 | - | 4 | 30 | 48,0 | - | 23 | 57,3 | T23 ; 24/48 ; 45º | 2" x 0,064" | M10x1 |
| | 31145703900 | - | 4 | 30 | 46,2 | - | 23 | 57,3 | T23 ; 24/48 ; 45º | 2" x 0,095" | M10x1 |
| | 31145704100 | FIAT: 4606768 | 1 | 25 | 66,9 | 17 | 29 | 46,0 | SAE Ø25 x 6C | 2 3/4"x0,064" | M16x1,5 |
| | 31145704302 | - | 4 | 30 | 73,3 | - | 53 | 58,3 | T23 ; 24/48 ; 45º | 3" x 0,064" | M10x1 |
| | 31145704700 | FIAT: 5943013 | 3 | 25 | 66,9 | 13 | 29 | 46,5 | T22; M:1,05/0,529 ; 45º | 2 3/4"x0,064" | M16x1,5 |
| | 31145705000 | - | 4 | 30 | 60,6 | - | 30 | 57,3 | T23 ; 24/48 ; 45º | 2 1/2"x0,064" | M10x1 |
| | 31145705200 | - | 4 | 30 | 73,3 | - | 53 | 58,3 | T25 ; 24/48 ; 45º | 3" x 0,064" | M10x1 |
| | 31145706000 | - | 4 | 30 | 71,6 | - | 53 | 58,3 | T27 ; 24/48 ; 45º | 3" x 0,095" | M10x1 |
| | 31145706100 | - | 4 | 30 | 73,3 | - | 53 | 48,0 | T27 ; 24/48 ; 45º | 3" x 0,064" | M10x1 |
| 1310 | 31315700401 | - | 1 | 35 | 46,2 | 28 | 32 | 59,5 | SAE 1 3/8" x 10C | 2 " x 0,095" | W 3/4"x20 |
| | 31315700600 | HS: 3157-1441 | 1 | 35 | 60,6 | 25 | 32 | 59,5 | SAE 1 3/8" x 10C | 2 1/2" x 0,064" | W 3/4"x20 |
| | 31315700700 | - | 1 | 35 | 66,9 | 25 | 32 | 59,5 | SAE 1 3/8" x 10C | 2 3/4" x 0,064" | W 3/4"x20 |
| | 31315701000 | - | 1 | 35 | 73,3 | 25 | 32 | 59,5 | SAE 1 3/8" x 10C | 3" x 0,064" | W 3/4"x20 |
| | 31315701100 | - | 2 | 35 | 73,3 | - | 27 | 49,0 | SAE 1 3/8" x 10C | 3" x 0,064" | M10x1 |
| | 41315701100 | - | 4 | 45 | 73,3 | - | 31 | 45,0 | SAE 1 3/8" x 10C | 3" x 0,064" | M10x1 |
| | 31315701300 | - | 2 | 35 | 44,1 | - | 30,6 | 59,5 | SAE 1 3/8" x 10C | 50 x 3mm | M12x1,5 |
| | 31315701400 | - | 2 | 35 | 66,2 | - | 31,7 | 59,5 | SAE 1 3/8" x 10C | 70 x 2mm | M12x1,5 |
| | 31315701500 | - | 2 | 35 | 54,2 | - | 31,7 | 59,5 | SAE 1 3/8" x 10C | 60 x 3mm | M12x1,5 |
| | 31315701900 | - | 2 | 35 | 71,6 | - | 38,5 | 56,5 | T 32;24/48;45º | 3" x 0,095" | M12x1,5 |
| | 31315702000 | - | 1 | 35 | 59,0 | 25 | 32 | 59,5 | SAE 1 3/8" x 10C | 2 1/2" x 0,095" | W 3/4"x20 |
| | 31315702101 | - | 1 | 35 | 44,1 | 28,6 | 30,6 | 59,5 | SAE 1 3/8" x 10C | 50 x 3mm | W 3/4"x20 |
| 1510 | 31515700300 | HS: 5157-1201 | 1 | 40 | 84,3 | 19 | 70 | 100,8 | SAE 1 1/2" x 10C | 3 1/2"x0,095" | W 1"x20 |
| | 31515700900 | HS: 5157-1211 | 1 | 40 | 71,6 | 19 | 70 | 100,8 | SAE 1 1/2" x 10C | 3" x 0,095" | W 1"x20 |
| | 31515701000 | HS: 5157-2641 | 1 | 40 | 71,6 | 22 | 30 | 75,5 | SAE 1 1/2" x 10C | 3" x 0,095" | W 1"x20 |
| | 31515701100 | HS: 5157-2651 | 1 | 40 | 84,3 | 22 | 28 | 75,5 | SAE 1 1/2" x 10C | 3 1/2"x0,095" | W 1"x20 |
| | 31515701600 | - | 1 | 40 | 44,1 | 22 | 29,6 | 75,5 | SAE 1 1/2" x 10C | 52 x 4mm | W 1"x20 |

## MIDSHIP STUP SHAFTS / LAGERZAPFEN / ARAYATAK MİLLERİ



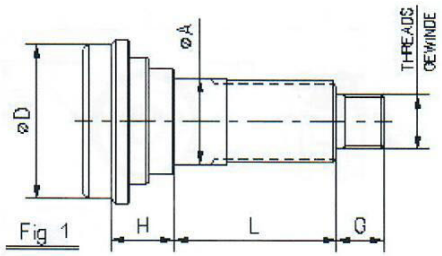

Fig 1

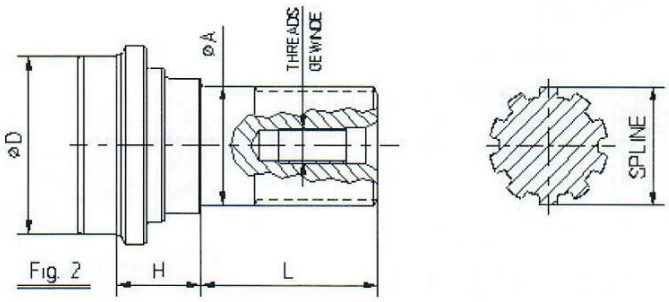

Fig. 2

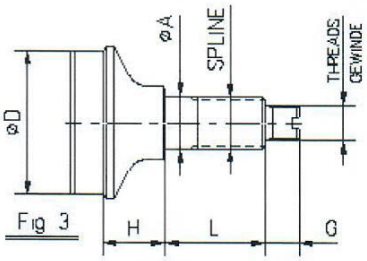

Fig 3

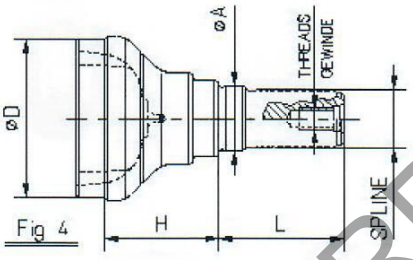

Fig 4

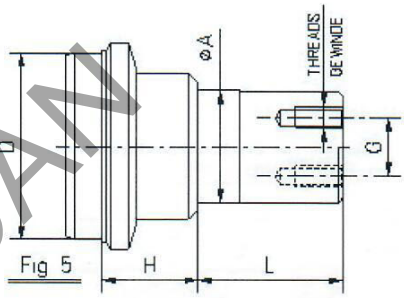

Fig 5



**KAT-57/2** **18/12/2008**

| SERIE BAUGR SERİ | NEW PART NO TEIL NR NEU YENİ PARÇA NO | REF. | FIG. | A | D | G | H | L | SPLINE DATA ZAHNPROFIL KANAL ÖLÇÜLERİ | TUBE O.D.x THICK. ROHRDURCHM.xDICKE BORU ÇAPIxET KAL. | THREADS GEWINDE VİDA |
|---|---|---|---|---|---|---|---|---|---|---|---|
| 1600 | 31605700300 | - | 1 | 55 | 83,3 | 35 | 14 | 123,0 | SAE 1 3/4" x 10C | 90 x 3,5mm | M27x1,5 |
| | 31605700500 | DS: 5-53-141 | 1 | 45 | 82,3 | 22 | 28 | 81,2 | SAE 1 3/4" x 10C | 3 1/2"x0,134" | 1 1/4"x18 |
| | 31605700900 | - | 1 | 55 | 84,3 | 35 | 14 | 123,0 | SAE 1 3/4" x 10C | 3 1/2"x0,095" | M27x1,5 |
| 1630 | 31635700700 | - | 1 | 45 | 71,6 | 33 | 20 | 111,5 | SAE 1 3/4" x 10C | 3" x 0,095" | M27x1,5 |
| | 31635701200 | BRD: 63/235383 | 1 | 45 | 83,3 | 35 | 32 | 74,5 | SAE 1 3/4" x 10C | 90 x 3,5mm | M27x1,5 |
| | 31635701300 | - | 1 | 45 | 71,6 | 35 | 32 | 68,5 | SAE 1 3/4" x 10C | 3" x 0,095" | M27x1,5 |
| | 31635701600 | - | 2 | 45 | 84,3 | - | 35 | 74,5 | SAE 1 3/4" x 10C | 90 x 3,5mm | M16x1,5 |
| | 31635701700 | - | 1 | 45 | 84,3 | 25 | 28 | 77,3 | SAE 1 3/4" x 10C | 3 1/2" x 0,095" | 1 1/4"x18 |
| | 31635701800 | - | 1 | 45 | 84,3 | 33 | 35 | 74,5 | SAE 1 3/4" x 10C | 3 1/2" x 0,095" | M27x1,5 |
| 1700 | 31705700400 | DS: 6-53-201 | 1 | 50 | 95,0 | 22 | 28 | 103,2 | SAE 1 61/64" x 10C | 4" x 0,134" | 1 1/4"x18 |
| 1800 | 31805700400 | HS: 8357-001 | 1 | 60 | 80,0 | 35 | 42 | 88,5 | SAE 2 1/4" x 10C | 3 1/2"x0,188" | M27x1,5 |
| | 31805700900 | DS: 6.5-53-91 | 1 | 60 | 107,8 | 25 | 33 | 101,6 | SAE 2 11/32" x 16 | 4 1/2"x0,134" | 1 1/4"x18 |
| | 31805701000 | - | 1 | 60 | 98,1 | 35 | 42 | 88,5 | SAE 2 1/4" x 10C | 110 x 6 mm | M27x1,5 |
| 381 | 33815700100 | MB: 9714110002 | 2 | 45 | 85,1 | - | 34 | 79 | 45x2,5x16 DIN 5480 | 90 x 2,5mm | M16x1,5 |
| | 33815700200 | - | 2 | 45 | 85,1 | - | 35 | 79 | 45x2,5x16 DIN 5480 | 90 x 2,5mm | M16x1,5 |
| | 33815700300 | - | 2 | 45 | 84,3 | - | 35 | 79 | 45x2,5x16 DIN 5480 | 3 1/2"x0,095" | M16x1,5 |
| 385 | 33855700101 | MB: 3854110202 | 2 | 55 | 82,1 | - | 31 | 89,0 | 55x2,5x20 DIN 5480 | 92 x 5mm | M16x1,5 |
| | 33855700300 | - | 2 | 55 | 82,1 | - | 39 | 82,0 | 55x2,5x20 DIN 5480 | 92 x 5mm | M16x1,5 |
| | 33855700800 | - | 2 | 55 | 90,1 | - | 39 | 87,0 | 55x2,5x20 DIN 5480 | 100 x 4mm | M16x1,5 |
| | 33855700900 | - | 2 | 55 | 90,1 | - | 39 | 82,0 | 55x2,5x20 DIN 5480 | 100 x 4mm | M16x1,5 |
| 389 | 33895700200 | MB: 3894110102 | 2 | 60 | 90,1 | - | 35 | 113 | 60x2,5x22 DIN 5480 | 100 x 5mm | M16x1,5 |
| | 33895700300 | - | 2 | 60 | 90,1 | - | 45 | 113 | 60x2,5x22 DIN 5480 | 100 x 5mm | M16x1,5 |
| | 33895700800 | - | 2 | 60 | 98,5 | - | 46,5 | 89 | 60x2,5x22 DIN 5480 | 110 x 6mm | M16x1,5 |
| | 33895700900 | - | 2 | 60 | 90,1 | - | 44,5 | 89 | 60x2,5x22 DIN 5480 | 100 x 5mm | M16x1,5 |
| | 33895701000 | - | 2 | 60 | 112,0 | - | 44,5 | 89 | 60x2,5x22 DIN 5480 | 120 x 4mm | M16x1,5 |
| 395 | 33955700100 | MAN: 81.39372.2055 | 5 | 65 | 108,1 | 34 | 56 | 84 | 65x2x31 DIN 5480 | 120 x 6mm | 2x M12x1,5 |
| | 33955700200 | MAN: 81.39372.2053 | 5 | 65 | 112,1 | 34 | 56 | 84 | 65x2x31 DIN 5480 | 120 x 4mm | 2x M12x1,5 |
| | 33955700300 | MAN: 81.39372.2052 | 5 | 65 | 114,1 | 34 | 56 | 84 | 65x2x31 DIN 5480 | 120 x 3mm | 2x M12x1,5 |
| | 33955700400 | - | 2 | 65 | 98,1 | - | 45 | 112 | 65x2x31 DIN 5480 | 110 x 6mm | M20x1,5 |
| 468 | 34685700100 | - | 2 | 70 | 98,5 | - | 37 | 110,5 | 70x2,5x26 DIN 5480 | 110 x 6mm | M20x1,5 |
| | 34685700200 | - | 2 | 70 | 130,3 | - | 37 | 110,5 | 70x2,5x26 DIN 5480 | 140 x 5mm | M20x1,5 |

# CENTER BEARING & SUPPORTS / ZWISCHENWELLENLAGER
# KOMPLE ARAYATAKLAR

SPICER TYPE

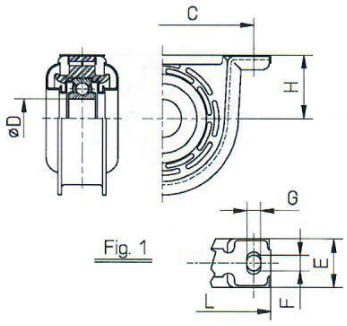


Fig. 1

FORD TAUNUS TYPE

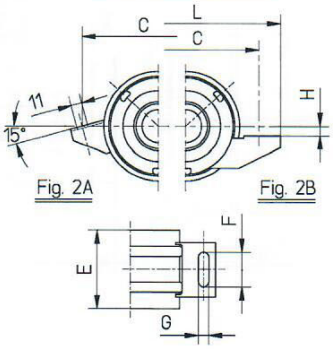


Fig. 2A Fig. 2B

FORD TAUNUS TYPE

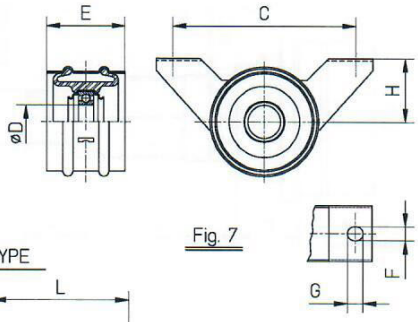


Fig. 7

ISUZU TYPE

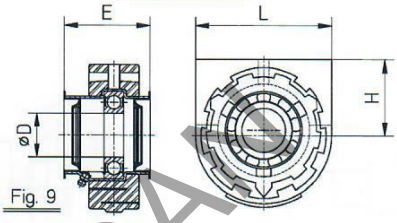


Fig. 9

FORD TRANSIT TYPE

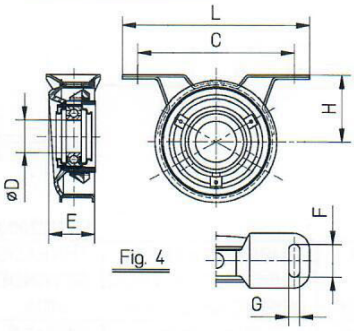


Fig. 4

HYUNDAI TYPE

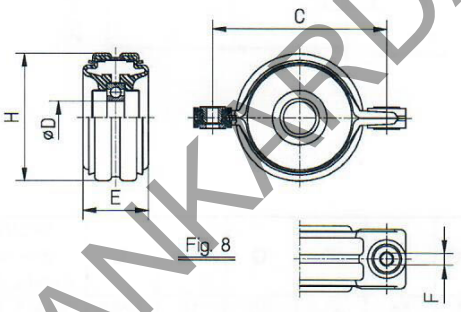


Fig. 8

FIAT TYPE

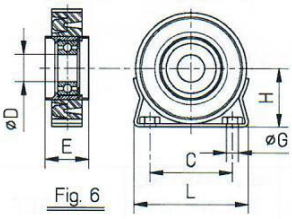


Fig. 6



**KAT-48** **22/12/2008**

| SERIE BAUGR SERİ | NEW PART NO TEIL NR NEU YENİ PARÇA NO | REF. | FIG. | D | H | C | L | E | F | G | BEARING WIDTH KUGELLAGERBREITE RULMAN GENİŞLİĞİ |
|---|---|---|---|---|---|---|---|---|---|---|---|
| 1140 | 41144802500 | FIAT4181556 | 6 | 25 | 54,0 | 76,0 | - | 40,0 | - | M8 | 18 |
| 1300 | 41304803000 | B.R.D.504831 | 2B | 30 | 8,5 | 150,0 | 175 | 73,0 | 32,0 | 11,5 | 14 |
| | 41304803001 | B.R.D.02/504318 | 2A | 30 | - | 140,0 | - | 73,0 | 32,0 | 10,2 | 14 |
| | 41304803006 | - | 7 | 30 | 57,9 | 168,3 | - | 72,0 | 13,0 | 14,2 | 14 |
| | 41304803009 | - | 4 | 30 | 60,0 | 144,0 | 172 | 41,5 | 30,0 | 10,2 | 14 |
| | 41304803010 | - | 4 | 30 | 81,0 | 144,0 | 172 | 41,5 | 30,0 | 10,2 | 14 |
| | 41304803012 | - | 4 | 30 | 60,0 | 168,4 | 199 | 41,5 | 30,0 | 12,8 | 14 |
| | 41304803014 | - | 8 | 30 | 118,0 | 160,0 | - | 60,0 | 10,8 | - | 16 |
| | 41304803015 | - | 4 | 30 | 60,0 | 144,0 | 172 | 41,5 | 30,0 | 10,2 | 14 |
| | 41304803017 | - | 4 | 30 | 60,0 | 144,0 | 172 | 41,5 | 30,0 | 10,2 | 14 |
| 1310 | 41314803500 | H.S.3580-3501 | 1 | 35 | 57,9 | 168,4 | 197 | 44,5 | 14,2 | 12,7 | 25 |
| | 41314803501 | - | 1 | 35 | 57,9 | 168,4 | 197 | 44,5 | 14,2 | 12,7 | 17+(2x4) |
| | 41314803504 | - | 1 | 35 | 57,9 | 168,4 | 197 | 44,5 | 14,2 | 12,7 | 25+(2x5) |
| | 41314803508 | | 4 | 35 | 60,0 | 144,0 | 172 | 41,5 | 30,0 | 10,2 | 14 |
| | 41314803509 | | 4 | 35 | 60,0 | 144,0 | 172 | 41,5 | 30,0 | 10,2 | 14 |
| | 41314804503 | - | 4 | 45 | 63,0 | 168,2 | 199 | 51,5 | 30,0 | 10,2 | 17,5 |
| | 41314804504 | FORD92VB-4826-BB | 4 | 45 | 61,2 | 144,0 | 172 | 51,5 | 30,0 | 10,2 | 17,5 |
| | 41314804509 | | 4 | 45 | 63,5 | 144,0 | 172 | 51,9 | 30,0 | 10,2 | 17,5 |
| 1510 | 41514804000 | H.S.5180-4001 | 1 | 40 | 62,7 | 168,4 | 197 | 51,2 | 12,7 | 12,7 | 27+(2x0,8) |
| | 41514804002 | - | 1 | 40 | 82,7 | 170,0 | 197 | 51,2 | 20,0 | 13,0 | 27+(2x0,8) |
| | 41514804003 | | 9 | 40 | 69,5 | 125,0 | - | 79,4 | - | - | 18 |
| | 41514804004 | | 9 | 40 | 69,5 | 125,0 | - | 79,4 | - | - | 18 |

(*) WITH SPECIAL BRACKET / MIT SPEZIELLEN ANCHLUSS / ÖZEL BRAKETLİ

# CENTER BEARING & SUPPORTS / ZWISCHENWELLENLAGER
# KOMPLE ARAYATAKLAR



SPICER TYPE

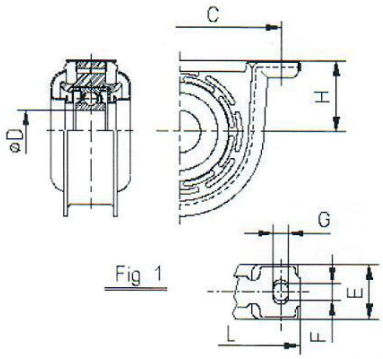


Fig. 1

MERCEDES TYPE

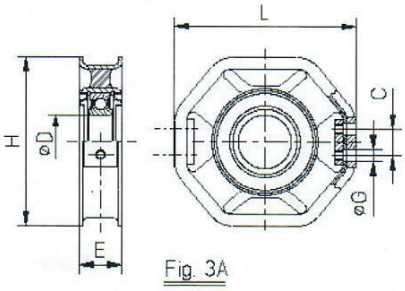


Fig. 3A

MERCEDES TYPE

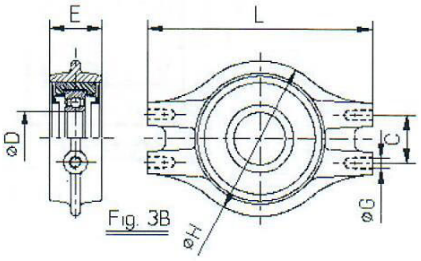


Fig. 3B

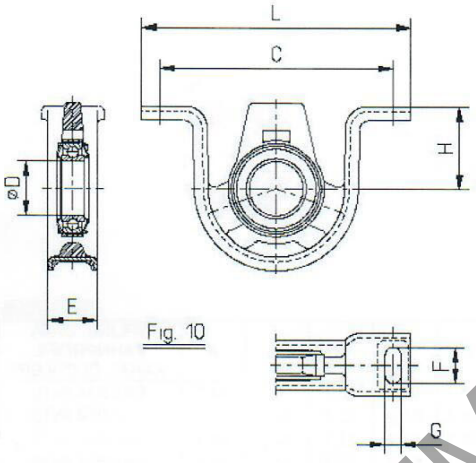


Fig. 10

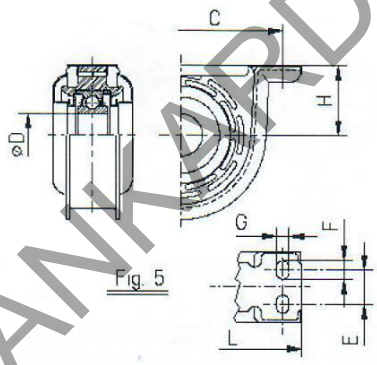


Fig. 5

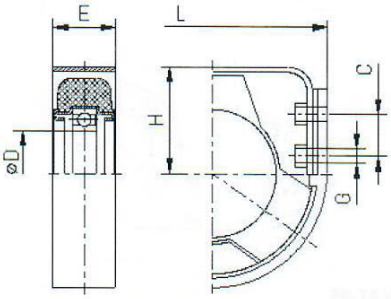


Fig. 11



KAT-48 22/12/2008

| SERIE BAUGR SERİ | NEW PART NO TEIL NR NEU YENİ PARÇA NO | REF. | FIG. | D | H | C | L | E | F | G | BEARING WIDTH KUGELLAGERBREITE RULMAN GENİŞLİĞİ |
|---|---|---|---|---|---|---|---|---|---|---|---|
| 1630 | 41634804500 | H.S.6380-4501 | 1 | 45 | 69,1 | 193,8 | 230 | 57,6 | 14,2 | 12,7 | 19 |
| | 41634804503 | H.S.6080-4501 | 1 | 45 | 69,1 | 193,8 | 230 | 57,6 | 14,2 | 12,7 | 27 |
| | 41634804507 | - | 5 | 45 | 63,0 | 158,0 | 195 | 36,0 | 19,0 | 11,0 | 19 |
| | 41634804508 | - | 5 | 45 | 69,1 | 190,0 | 230 | 22,0 | 15,0 | 11,0 | 19 |
| | 41634804510 | - | 10 | 45 | 67,0 | 195,5 | 225 | 41,0 | 30,5 | 13,5 | 19 |
| 1700 | 41704805501 | H.S.7080-5501 | 1 | 55 | 71,4 | 193,8 | 230 | 57,2 | 14,2 | 16,0 | 18 |
| 1800 | 41804805500 | | 11 | 55 | 85,7 | 219,0 | 260 | 55,6 | 24,0 | 16,0 | 25 |
| | 41804806004 | - | 1 | 60 | 85,7 | 230,0 | 265 | 63,5 | - | Ø17 | 22 |
| | 41804806005 | - | 1 | 60 | 85,7 | 219,2 | 265 | 63,5 | - | Ø17 | 22 |
| 1830 | 41834806000 | H.S.8380-6002 | 1 | 60 | 85,7 | 219,2 | 260 | 63,5 | 14,2 | 16,0 | 22 |
| 385 | 43854805500 | M.B. 3854100922 | 3A | 55 | 174 | 27,0 | 190 | 45,0 | - | M10 | 25 |
| | 43854805502 | M.B. 3464100010 | 3B | 55 | 160 | 50,0 | 233 | 54,0 | - | M12 | 25 |
| | 43854805505 * | - | 1 | 55 | 85,7 | 219,2 | 260 | 63,5 | 14,2 | 16,0 | 25 |
| 395 | 43954806500 | - | 1 | 65 | 86,0 | 230,0 | 265 | 63,5 | - | Ø17 | 23 |
| | 43954806501 | - | 1 | 65 | 86,0 | 219,2 | 265 | 63,5 | - | Ø17 | 23 |
| | 43954806502 | | 1 | 65 | 86,0 | 230,0 | 265 | 63,5 | 22,4 | Ø17 | 23 |
| | 43954806503 | | 1 | 65 | 86,0 | 230,0 | 265 | 63,5 | 22,4 | Ø17 | 23 |
| 468 | 44684807000 | M.B. 6564110012 | 11 | 70 | 88,2 | 35,0 | 190 | 52,0 | - | M12 | 20 |

(*) WITH SPECIAL BRACKET / MIT SPEZIELLEN ANCHLUSS / ÖZEL BRAKETLİ

# MIDSHIP ASYY'S / LAGERZAPFEN
# ARAYATAK MİLİ KOMPLELERİ

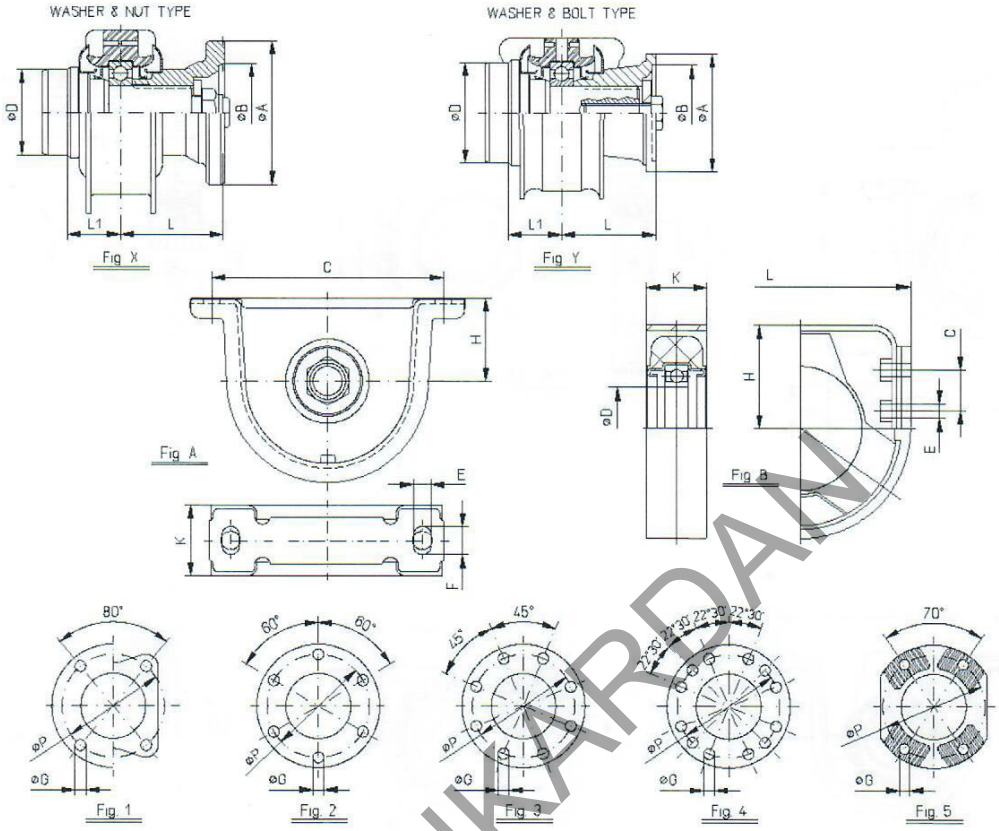


**KAT-95** 09/12/2005

| SERIE BAUGR. SERİ | NEW PART NO TEIL NR NEU YENİ PARÇA NO | FIG | A | B | P | G | L | L1 | D | TUBE SIZE | C | H | E | F | K | SPLINE DATA ZAHNPROFIL KANAL ÖLÇÜLERİ |
|---|---|---|---|---|---|---|---|---|---|---|---|---|---|---|---|---|
| 1310 | 41319500100 | XA1 | 97 | 60,3 | 79,4 | 10,2 | 73,2 | 44,5 | 66,8 | Ø2,75"x,064" | 168,3 | 57,9 | 12,7 | 14,2 | 44,5 | SAEØ34,9x10 |
| | 41319500200 | XA1 | 97 | 60,3 | 79,4 | 9,76 | 73,2 | 44,2 | 60,6 | Ø2,5"x,064" | 168,3 | 57,9 | 12,7 | 14,2 | 44,5 | SAEØ34,9x10 |
| | | XA2 | 100 | 57,0 | 84 | 8,15 | 73,2 | 44,5 | 60,6 | Ø2"x,095" | 168,3 | 57,9 | 12,7 | 14,2 | 44,5 | SAEØ34,9x10 |
| | 41319500800 | XA1 | 97 | 60,3 | 79,4 | 10,2 | 73,2 | 44,2 | 73,3 | Ø3"x,064" | 168,3 | 57,9 | 12,7 | 14,2 | 44,5 | SAEØ34,9x10 |
| | 41319500900 | XA1 | 118 | 69,9 | 95,25 | 12,2 | 73,2 | 44,2 | 71,6 | Ø3"x,095" | 168,3 | 57,9 | 12,7 | 14,2 | 44,5 | SAEØ34,9x10 |
| | 41319501000 | XA1 | 97 | 60,3 | 79,4 | 10,2 | 73,2 | 44,2 | 46,2 | Ø2"x,095" | 168,3 | 57,9 | 12,7 | 14,2 | 44,5 | SAEØ34,9x10 |
| | 41319501100 | XA1 | 97 | 60,3 | 79,4 | 10,2 | 73,2 | 44,2 | 59,6 | Ø2,5"x,083" | 168,3 | 57,9 | 12,7 | 14,2 | 44,5 | SAEØ34,9x10 |
| 1410 | 41419500100 | XA1 | 118 | 69,9 | 95,3 | 11,3 | 82,6 | 44,3 | 71,6 | Ø3"x,064" | 168,3 | 62,7 | 12,7 | 12,7 | 51,2 | SAEØ38,1x10 |
| | 41419500200 | XA1 | 118 | 69,9 | 95,3 | 12,3 | 82,6 | 44,3 | 71,6 | Ø3"x,064" | 168,3 | 62,8 | 12,7 | 12,6 | 51,2 | SAEØ38,1x10 |
| | 41419500400 | XA3 | 120 | 75,0 | 101,5 | 10,2 | 82,6 | 43,9 | 71,6 | Ø3"x,095" | 168,3 | 62,7 | 12,7 | 20,6 | 51,2 | SAEØ38,1x10 |
| | 41419500600 | XA1 | 118 | 69,9 | 95,3 | 12,3 | 82,6 | 43,9 | 72,3 | Ø3"x,083" | 168,3 | 62,7 | 12,7 | 20,6 | 51,2 | SAEØ38,1x10 |
| 1630 | 41639500100 | XA3 | 175 | 168,3 | 155,6 | 9,7 | 89,1 | 44,5 | 82,1 | Ø 92x5,0 | 193,8 | 69,1 | 16 | 23,9 | 57,6 | SAEØ44,5x10 |
| | 41639500200 | XA1 | 146 | 95,3 | 120,7 | 14,2 | 79,5 | 41,5 | 71,6 | Ø3"x,095" | 193,8 | 69,1 | 16 | 23,9 | 57,6 | SAEØ44,5x10 |
| | 41639500300 | XA1 | 146 | 95,3 | 120,7 | 14,4 | 85,6 | 44,5 | 71,6 | Ø3"x,095" | 193,8 | 69,1 | 16 | 23,9 | 57,6 | SAEØ44,5x10 |
| | 41639500600 | XA3 | 120 | 75,0 | 101,5 | 10,2 | 78,0 | 44,5 | 71,6 | Ø3"x,095" | 193,8 | 69,1 | 16 | 23,9 | 57,6 | SAEØ44,5x10 |
| | 41639500700 | XA5 | 120 | 82 | 100,0 | 11,1 | 85,5 | 44,5 | 71,4 | Ø3"x,095" | 193,8 | 69,1 | 16 | 23,9 | 57,6 | SAEØ44,5x10 |
| 1810 | 41819500100 | XA4 | 203 | 196,8 | 184,1 | 11,25 | 105 | 53,0 | 98,1 | Ø100x6,0 | 219,0 | 85,7 | 16 | 23,9 | 63,5 | SAEØ57,1x10 |
| 381 | 43819500101 | YA5 | 120 | 82 | 100,0 | M10x1 | 89,5 | 44,5 | 85,1 | Ø 90x2,5 | 193,8 | 69,1 | 14 | 23,9 | 57,6 | N45x2,5x16 DIN5480 |
| | 43819500102 | YA5 | 120 | 82 | 100,0 | M10x1 | 89,5 | 44,5 | 84,3 | Ø3,5"x,095" | 193,8 | 69,1 | 14 | 23,9 | 57,6 | N45x2,5x16 DIN5480 |
| 385 | 43859500100 | YA5 | 150 | 98,6 | 130,0 | 13,1 | 91,0 | 48,0 | 82,1 | Ø 92x5,0 | 193,8 | 71,4 | 16 | 23,8 | 57,2 | N55x2,5x20 DIN5480 |
| | 43859500200 | YA5 | 150 | 98,6 | 130,0 | 13,1 | 94,5 | 43,5 | 82,1 | Ø 92x5,0 | 219,0 | 85,7 | 16 | 24 | 45 | N55x2,5x20 DIN5480 |
| | 43859500300 | YA5 | 165 | 95 | 130,0 | 16,2 | 94,5 | 43,5 | 82,1 | Ø 92x5,0 | 219,0 | 85,7 | 16 | 24 | 45 | N55x2,5x20 DIN5480 |
| | 43859500400 | YA3 | 175 | 168,3 | 155,6 | 9,8 | 87,5 | 48,0 | 82,1 | Ø 92x5,0 | 193,8 | 71,4 | 16 | 23,8 | 57,2 | N55x2,5x20 DIN5480 |
| 389 | 43899500200 | YA5 | 180 | 108 | 150 | 15,1 | 110,0 | 57,5 | 90,1 | Ø100x6,0 | 230 | 85,7 | 17 | 17 | 63,5 | N60x2,5x22 DIN5480 |
| | 43899500300 | YA5 | 150 | 95 | 130 | 13,1 | 87,4 | 56,0 | 90,1 | Ø100x5,0 | 230 | 85,7 | 17 | 17 | 63,5 | N60x2,5x22 DIN5480 |
| 395 | 43959500100 | YA5 | 180 | 111,6 | 150 | 15,1 | 110,0 | 56,5 | 98,1 | Ø110x6,0 | 230 | 86 | 17 | 22,4 | 55,6 | N65x2,0x31 DIN5480 |
| | 43959500202 | YA5 | 150 | 105 | 130 | 13,1 | 86,5 | 67,5 | 112,1 | Ø120x4,0 | 230 | 86 | 17 | 22,4 | 55,6 | N65x2,0x31 DIN5480 |
| | 43959500301 | YA5 | 180 | 105 | 150 | 15,1 | 86,5 | 67,5 | 108,1 | Ø120x6,0 | 230 | 86 | 17 | 22,4 | 55,6 | N65x2,0x31 DIN5480 |
| | 43959500302 | YA5 | 180 | 105 | 150 | 15,1 | 86,5 | 67,5 | 112,1 | Ø120x4,0 | 230 | 86 | 17 | 22,4 | 55,6 | N65x2,0x31 DIN5480 |
| | 43959500303 | YA5 | 180 | 105 | 150 | 15,1 | 86,5 | 67,5 | 114,1 | Ø120x3,0 | 230 | 86 | 17 | 22,4 | 55,6 | N65x2,0x31 DIN5480 |
| 468 | 44689500101 | YB5 | 180 | 105 | 150 | 15,1 | 110,0 | 47,0 | 98,1 | Ø110x6,0 | 35 | 88,2 | M12 | - | 52 | N70x2,5x26 DIN5480 |
| | 44689500102 | YB5 | 180 | 105 | 150 | 15,1 | 110,0 | 54,0 | 130,1 | Ø140x5,0 | 35 | 88,2 | M12 | - | 52 | N70x2,5x26 DIN5480 |

ß° - MAX. ANGULAR MOVEMENT / MAX. BEUGEWINKEL / MAX. ÇALIŞMA AÇISI

## UNIVERSAL JOINT KITS / ZAPFENKREUZGARNITUREN / KOMPLE ISTAVROZLAR



OUTSIDE SNAPRING

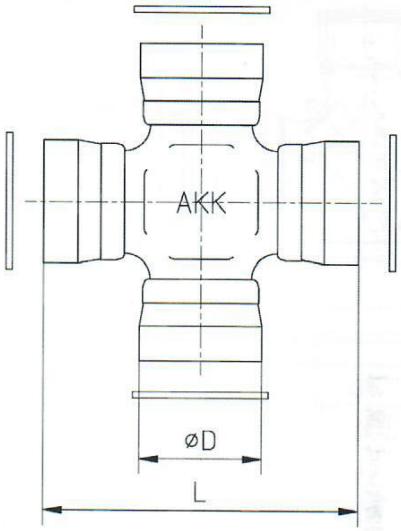


Fig. 1

LOCK PLATE + WASHER

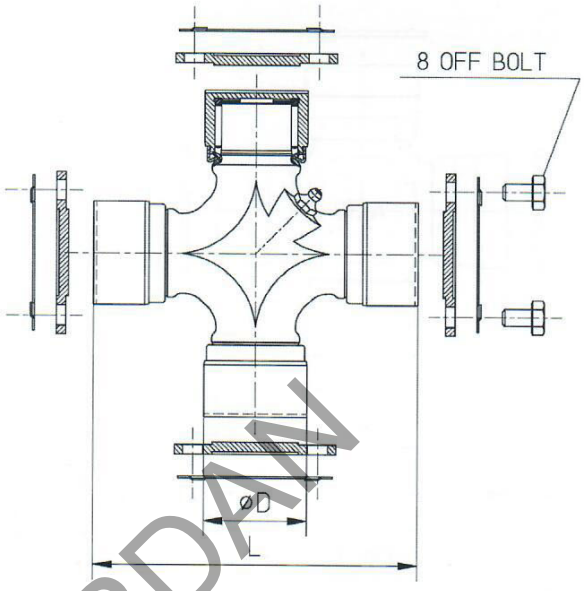


Fig. 2

KAT-13/1

22/12/2008

| SERIE BAUGR SERİ | NEW PART NO TEIL NR NEU YENİ PARÇA NO | CATALOG NO KATALOG NR KATALOG NO | REF. | FIG. | D | L | NOTES |
|---|---|---|---|---|---|---|---|
| 000 | 40001301400 | AK 7440 | LÖBRO: U-744 | 1 | 38,0 | 105,9 | CENTER GREASE NIPPLE |
| | 40001302400 | AK 3870 | SCANIA: 264043 | 1 | 44,0 | 149,0 | SIDE GREASE NIPPLE |
| | 40001302500 | AK 3880 | SCANIA: 264044 | 1 | 50,0 | 164,0 | SIDE GREASE NIPPLE |
| | 40001303601 | - | - | 1 | 47,0 | 130,9 | SIDE GREASE NIPPLE |
| | 40001303602 | - | - | 1 | 47,0 | 130,9 | SIDE GREASE NIPPLE |
| | 40001304700 | AK 8130 | - | 1 | 57,0 | 144,0 | CENTER GREASE NIPPLE |
| | 40001306400 | - | - | 1 | 24,0 | 60,0 | LIFETIME LUBRICATION |
| | 40001307000 | - | - | 1 | 27,0 | 70,15 | SIDE GREASE NIPPLE |
| | 40001307100 | - | - | 1 | 27,0 | 80,0 | LIFETIME LUBRICATION |
| | 40001307200 | - | - | 1 | 27,0 | 70,0 | SIDE GREASE NIPPLE |
| | 40001307400 | - | - | 1 | 20,0 | 57,0 | SIDE GREASE NIPPLE |
| | 40001307600 | - | - | 1 | 20,0 | 54,8 | SIDE GREASE NIPPLE |
| | 40001307700 | - | - | 1 | 22,06 | 64,5 | LIFETIME LUBRICATION |
| | 40001308200 | - | - | 1 | 25,0 | 63,8 | LIFETIME LUBRICATION |
| | 40001308300 | - | - | 1 | 25,0 | 63,8 | LIFETIME LUBRICATION |
| | 40001308400 | - | - | 1 | 25,0 | 63,8 | SIDE GREASE NIPPLE |
| | 40001308500 | - | - | 1 | 25,0 | 76,8 | SIDE GREASE NIPPLE |
| | 40001309401 | - | - | 2 | 50,05 | 152,7 | SIDE GR.NIP.BOLT M8x1,25 |
| | 40001309701 | - | - | 1 | 27,0 | 80,0 | SIDE GREASE NIPPLE |
| | 40001309800 | - | - | 1 | 27,0 | 70,0 | CENTER GREASE NIPPLE |
| | 40001309900 | - | - | 1 | 16,05 | 40,5 | LIFETIME LUBRICATION |
| | 40001310000 | - | - | 1 | 24,06 | 62,4 | LIFETIME LUBRICATION |
| | 40001310100 | - | - | 1 | 45,04 | 120,4 | CENTER GREASE NIPPLE |
| | 40001310300 | - | - | 1 | 31,0 | 88,0 | CENTER GREASE NIPPLE |
| | 40001310400 | - | - | 2 | 44,04 | 126,0 | SIDE GR.NIP.BOLT M6x1 |
| | 40001310600 | - | - | 1 | 65,0 | 172,0 | SIDE GREASE NIPPLE |
| 1140 | 41141300100 | AK 420 | HS: 1451-150N | 1 | 23,8 | 61,3 | LIFETIME LUBRICATION |
| | 41141300300 | AK 400 | HS: 1451-185W | 1 | 23,8 | 61,3 | CENTER GREASE NIPPLE |
| | 41141300600 | AK 500 | HS: 1451-194W | 1 | 23,8 | 61,3 | SIDE GREASE NIPPLE |
| | 41141302600 | AK 500 AG | - | 1 | 23,8 | 61,3 | CENTER GREASE NIPPLE |
| | 41141302700 | - | - | 1 | 23,8 | 61,3 | LIFETIME LUBRICATION |
| | 41141303300 | - | - | 1 | 23,8 | 61,3 | SIDE GREASE NIPPLE |
| 1300 | 41301300100 | AK 1110 | HS: 3051-035N | 1 | 27,0 | 74,6 | LIFETIME LUBRICATION |
| | 41301300200 | AK 1100 | HS: 3051-195W | 1 | 27,0 | 74,6 | SIDE GREASE NIPPLE |
| | 41301300700 | AK 1100 | BRD: 03/803246 | 1 | 27,0 | 74,6 | **H.D.** - SIDE GREASE NIPPLE |
| 1310 | 41311300100 | AK 1000 | HS: 3151-166W | 1 | 27,0 | 81,8 | SIDE GREASE NIPPLE |
| | 41311300200 | AK 1010 | HS: 3151-162N | 1 | 27,0 | 81,8 | LIFETIME LUBRICATION |
| | 41311300800 | AK 1000 | BRD: 04/508450 | 1 | 27,0 | 81,8 | **H.D.** - SIDE GREASE NIPPLE |
| | 41311301000 | AK 1010 | - | 1 | 27,0 | 81,8 | **H.D.** - LIFETIME LUBRICATION |
| 1410 | 41411300100 | AK 2000 | HS: 4151-179W | 1 | 30,2 | 106,3 | SIDE GREASE NIPPLE |
| | 41411300700 | AK 2000 | HS: 4151-179W | 1 | 30,2 | 106,3 | **H.D.** - SIDE GREASE NIPPLE |

## 32 UNIVERSAL JOINT KITS / ZAPFENKREUZGARNITUREN / KOMPLE ISTAVROZLAR

OUTSIDE SNAPRING

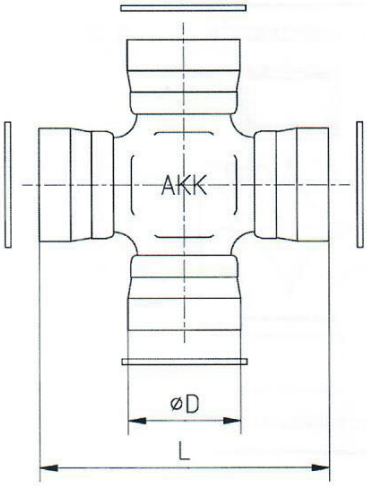


Fig. 1

LOCK PLATE + WASHER

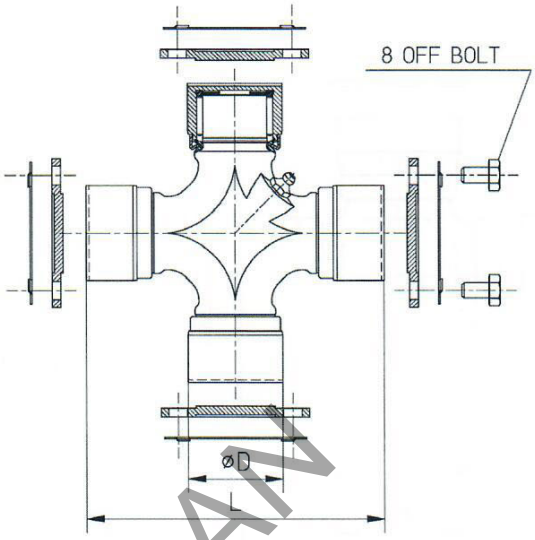


Fig. 2

**KAT-13/2** **22/12/2008**

| SERIE BAUGR SERİ | NEW PART NO TEIL NR NEU YENİ PARÇA NO | CATALOG NO KATALOG NR KATALOG NO | REF. | FIG. | D | L | NOTES |
|---|---|---|---|---|---|---|---|
| 1350 | 41351300100 | AK 2200 | HS: 3551-182W | 1 | 30,2 | 92,0 | SIDE GREASE NIPPLE |
| 1430 | 41431300300 | AK 2200 | - | 1 | 30,2 | 92,0 | **H.D. -** CENTER GREASE NIPPLE |
| | 41431300600 | - | - | 1 | 30,2 | 92,0 | SIDE GREASE NIPPLE |
| 1480 | 41481300200 | - | - | 1 | 34,9 | 106,3 | SIDE GREASE NIPPLE |
| | 41481300300 | AK 2300 | HS: 4851-263X | 1 | 34,9 | 106,3 | **H.D.** - SIDE GREASE NIPPLE |
| | 41481300400 | - | - | 1 | 34,9 | 106,3 | SIDE GREASE NIPPLE |
| | 41481300800 | - | - | 1 | 34,9 | 106,3 | SIDE GREASE NIPPLE |
| 1510 | 41511300100 | AK 3500 | HS: 5151-176Y | 1 | 39,7 | 115,8 | SIDE GREASE NIPPLE |
| | 41511300102 | - | - | 1 | 39,7 | 115,8 | SIDE GREASE NIPPLE |
| | 41511300103 | - | - | 1 | 39,7 | 115,42 | SIDE GREASE NIPPLE |
| 1630 | 41631300100 | AK 3630 | HS: 6351-002Y | 1 | 39,7 | 115,8 | **H.D. -** CENTER GREASE NIPPLE |
| 1710 | 41711300300 | AK 5000 | HS: 7151-001Y | 2 | 49,2 | 154,8 | SIDE GR.NIP.BOLT 5/16"BSF |
| | 41711300301 | AK 5000 | HS: (7151-001Y) | 2 | 49,2 | 154,8 | SIDE GR.NIP.BOLT M8x1,25 |
| | 41711300400 | - | - | 2 | 49,2 | 154,8 | SIDE GR.NIP.BOLT 3/8"BSF |
| 1810 | 41811300300 | AK 6760 | HS: 8151-001Y | 2 | 59,0 | 167,5 | CENTER GR.NIP.BOLT 3/8"BSF |
| | 41811300301 | AK 6760 | HS: (8151-001Y) | 2 | 59,0 | 167,5 | CENTER GR.NIP.BOLT M10x1,25 |
| | 41811300400 | - | - | 2 | 59,0 | 167,5 | CENTER GR.NIP.BOLT 3/8"BSF |
| 350 | 43501300200 | AK 7350 | - | 1 | 38,0 | 89,2 | CENTER GREASE NIPPLE |
| 381 | 43811300100 | AK 7471 | - | 1 | 42,0 | 106,0 | CENTER GREASE NIPPLE |
| | 43811300200 | - | - | 1 | 42,0 | 106,0 | LIFETIME LUBRICATION |
| 385 | 43851300100 | AK 7650 | LÖBRO: U-765 | 1 | 48,0 | 126,0 | CENTER GREASE NIPPLE |
| | 43851300400 | - | - | 1 | 48,0 | 126,0 | LIFETIME LUBRICATION |
| | 43851300500 | - | - | 1 | 48,0 | 126,0 | LIFETIME LUBRICATION |
| | 43851300700 | - | - | 1 | 48,05 | 125,8 | CENTER GREASE NIPPLE |
| 389 | 43891300100 | AK 7610 | - | 1 | 53,0 | 135,0 | CENTER GREASE NIPPLE |
| | 43891300200 | - | - | 1 | 53,0 | 135,0 | LIFETIME LUBRICATION |
| | 43891300300 | - | - | 1 | 53,0 | 135,0 | LIFETIME LUBRICATION |
| | 43891300400 | - | - | 1 | 53,0 | 135,0 | LIFETIME LUBRICATION |
| | 43891300600 | - | - | 1 | 53,0 | 135,0 | CENTER GREASE NIPPLE |
| | 43891300700 | - | - | 1 | 53,0 | 135,0 | CENTER GREASE NIPPLE |
| 395 | 43951300100 | AK 7630 | - | 1 | 57,0 | 152,0 | CENTER GREASE NIPPLE |
| | 43951300200 | - | - | 1 | 57,0 | 152,0 | LIFETIME LUBRICATION |
| | 43951300700 | - | - | 1 | 57,0 | 152,0 | CENTER GREASE NIPPLE |
| | 43951300800 | - | - | 1 | 57,0 | 152,0 | CENTER GREASE NIPPLE |
| 420 | 44201300300 | - | - | 1 | 30,2 | 81,8 | CENTER GREASE NIPPLE |
| 430 | 44301300100 | AK 7648 | - | 1 | 48,0 | 116,5 | CENTER GREASE NIPPLE |
| 434 | 44341300100 | AK 7560 | - | 1 | 52,0 | 133,0 | CENTER GREASE NIPPLE |
| 445 | 44451300100 | - | - | 1 | 52,0 | 147,2 | CENTER GREASE NIPPLE |
| 446 | 44461300100 | - | - | 1 | 53,0 | 147,2 | CENTER GREASE NIPPLE |

## UNIVERSAL JOINT KITS / ZAPFENKREUZGARNITUREN / KOMPLE ISTAVROZLAR



TWO INSIDE-TWO OUTSIDE SNAPRING

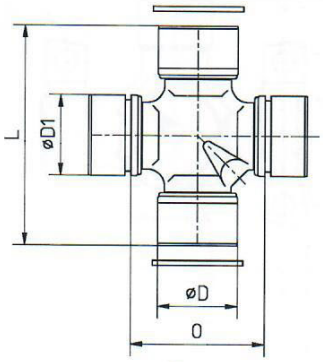


Fig. 3

INSIDE SNAPRING

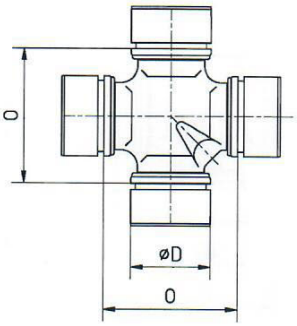


Fig. 4

TWO OUTSIDE SNAPRING + TWO BRACKET

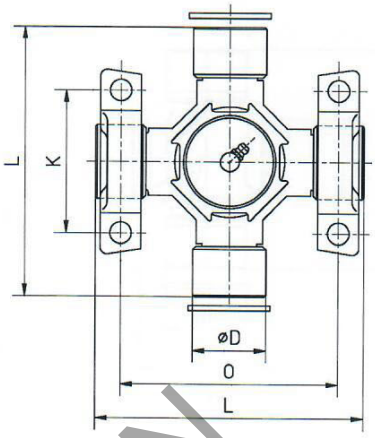


Fig. 5

OUTSIDE SNAPRING

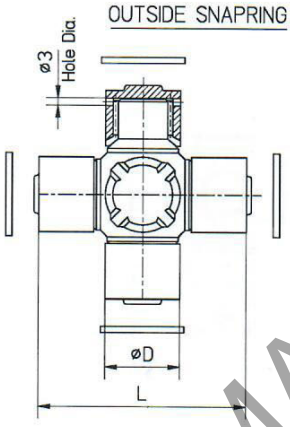


Fig. 6

STAKED TYPE

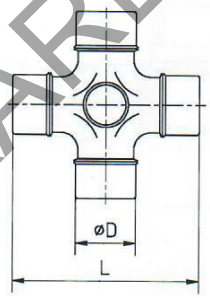


Fig. 7



KAT-13/3

22/12/2008

| SERIE BAUGR SERİ | NEW PART NO TEIL NR NEU YENİ PARÇA NO | CATALOG NO KATALOG NR KATALOG NO | REF | FIG | D/D1 | L | K | O | NOTES |
|---|---|---|---|---|---|---|---|---|---|
| 020 | 40201300100 | AK 250 | - | 7 | 15,0 | 38,0 | - | - | LIFETIME LUB.STAKED TYPE |
| | 40201300200 | - | - | 7 | 15,0 | 38,0 | - | - | LIFETIME LUB.STAKED TYPE |
| 040 | 40401300200 | AK 290 | - | 7 | 19,0 | 48,5 | - | - | LIFETIME LUB.STAKED TYPE |
| | 40401300500 | - | - | 7 | 19,0 | 48,5 | - | - | LIFETIME LUB.STAKED TYPE |
| 000 | 40001300600 | AK 1020 | DS: 5-74X | 4 | 27,0 | - | - | 52,4 | LIFETIME LUBRICATION |
| | 40001300800 | AK 1760 | LÖBRO: U-176 | 7 | 22,0 | 67,2 | - | - | LIFETIME LUB. STAKED TYPE |
| | 40001300900 | AK 7300 | LÖBRO: U-730 | 4 | 38,0 | - | - | 62,0 | CENTER GREASE NIPPLE |
| | 40001301000 | AK 7470 | LÖBRO: U-747 | 4 | 42,0 | - | - | 72,0 | CENTER GREASE NIPPLE |
| | 40001301101 | AK7280/4 | LÖBRO: U-728/4 | 7 | 24,0 | 74,5 | - | - | LIFETIME LUB.STAKED TYPE |
| | 40001301200 | AK 1720 | LÖBRO: U-172 | 4 | 28,0 | - | - | 44,0 | SIDE GREASE NIPPLE |
| | 40001301300 | AK 5354 | DS: 5-354X | 3 | 27/28,6 | 81,7 | - | 63,6 | SIDE GREASE NIPPLE |
| | 40001303300 | AK 7645 | SCANIA: 294380 | 5 | 38,0 | 148,0 | 75,0 | 122,0 | CENTER GREASE NIPPLE |
| | 40001303500 | AK 2251 | - | 6 | 30,0 | 83,0 | - | - | TWO BEARING CUP WITH HOLE |
| | 40001304401 | - | - | 4 | 28,0 | 63,5 | - | 44,0 | SIDE GREASE NIPPLE |
| | 40001305200 | AK 72625 | DS: 5-1306X | 4 | 27,3 | - | - | 50,8 | SIDE GREASE NIPPLE |
| | 40001305300 | AK 5353 | DS: 5-353X | 3 | 27/27,3 | 81,7 | - | 50,8 | SIDE GREASE NIPPLE |
| | 40001305400 | AK72625/1 | DS: 5-13061X | 4 | 27,3 | - | - | 50,8 | GREASE NIP. ON BEARING CUP |
| | 40001305600 | AK1720/3 | - | 4 | 28,0 | - | - | 44,0 | GREASE NIP. ON BEARING CUP |
| | 40001305800 | AK 7655 | SCANIA: 294383 | 5 | 48,0 | 161,0 | 85,0 | 131,8 | CENTER GREASE NIPPLE |

## 34 UNIVERSAL JOINT KITS / ZAPFENKREUZGARNITUREN / KOMPLE ISTAVROZLAR

TWO INSIDE-TWO OUTSIDE SNAPRING

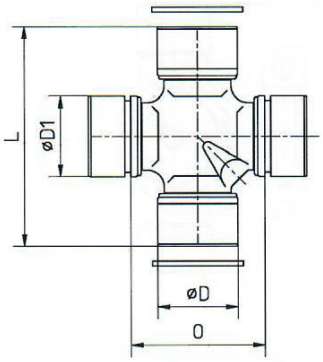


Fig. 3

INSIDE SNAPRING

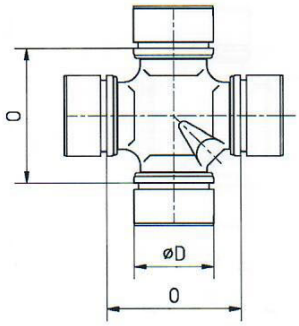


Fig. 4

TWO OUTSIDE SNAPRING + TWO BRACKET

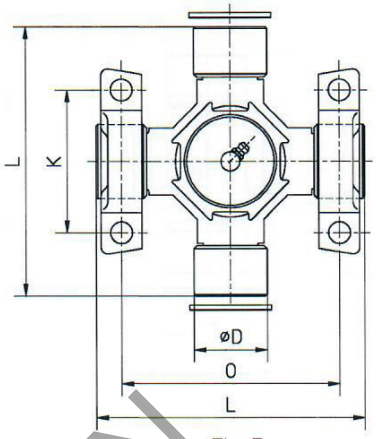


Fig. 5

OUTSIDE SNAPRING

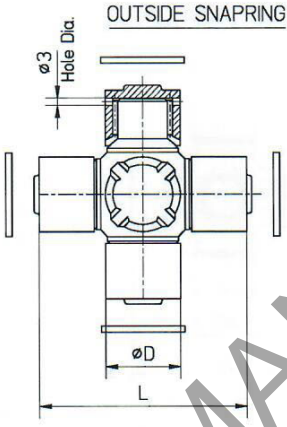


Fig. 6

STAKED TYPE

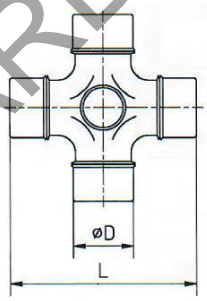


Fig. 7



KAT-13/4 22/12/2008

| SERIE BAUGR SERİ | NEW PART NO TEIL NR NEU YENİ PARÇA NO | CATALOG NO KATALOG NR KATALOG NO | REF | FIG | D | L | K | O | NOTES |
|---|---|---|---|---|---|---|---|---|---|
| 000 | 40001306100 | AK 1150 | - | 6 | 27,0 | 70,0 | - | - | TWO BEARING CUP WITH HOLE |
| | 40001307500 | - | - | 4 | 20,0 | - | - | 35,0 | LIFETIME LUBRICATION |
| | 40001307800 | - | - | 4 | 22,5 | - | - | 34,9 | SIDE GREASE NIPPLE |
| | 40001307900 | - | - | 4 | 22,5 | - | - | 35,2 | SIDE GREASE NIPPLE |
| | 40001308000 | - | - | 4 | 25,0 | - | - | 40,4 | SIDE GREASE NIPPLE |
| | 40001308100 | - | - | 4 | 25,0 | - | - | 40,0 | SIDE GREASE NIPPLE |
| | 40001308600 | - | - | 4 | 26,0 | - | - | 53,6 | SIDE GREASE NIPPLE |
| | 40001308700 | - | - | 4 | 26,5 | - | - | 48,0 | SIDE GREASE NIPPLE |
| | 40001308900 | - | - | 4 | 28,0 | - | - | 53,0 | SIDE GREASE NIPPLE |
| | 40001309000 | - | - | 4 | 29,0 | - | - | 49,0 | SIDE GREASE NIPPLE |
| | 40001309100 | - | - | 4 | 29,0 | - | - | 49,0 | CENTER GREASE NIPPLE |
| | 40001309200 | - | - | 4 | 30,0 | - | - | 55,1 | CENTER GREASE NIPPLE |
| | 40001309300 | - | - | 4 | 32,0 | - | - | 57,0 | CENTER GREASE NIPPLE |
| 468 | 44681300100 | - | - | 4 | 68,0 | 166,0 | - | 89,00 | LIFETIME LUBRICATION |
| | 44681300101 | - | - | 4 | 68,0 | 166,0 | - | 89,00 | CENTER GREASE NIPPLE |

## 4 WING BEARING

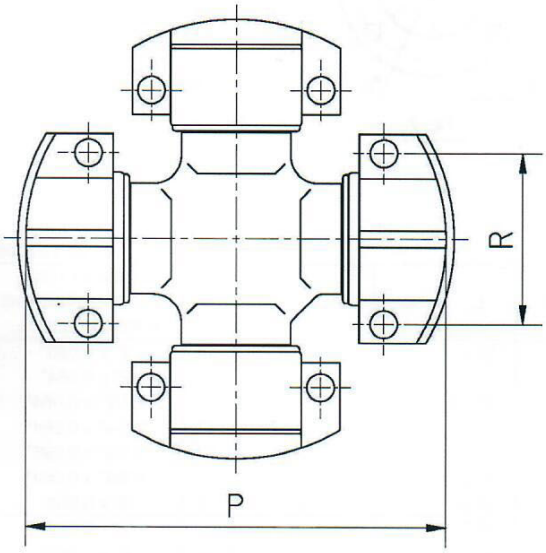


Fig. 1

## WING/GROOVED ROUND BEARING

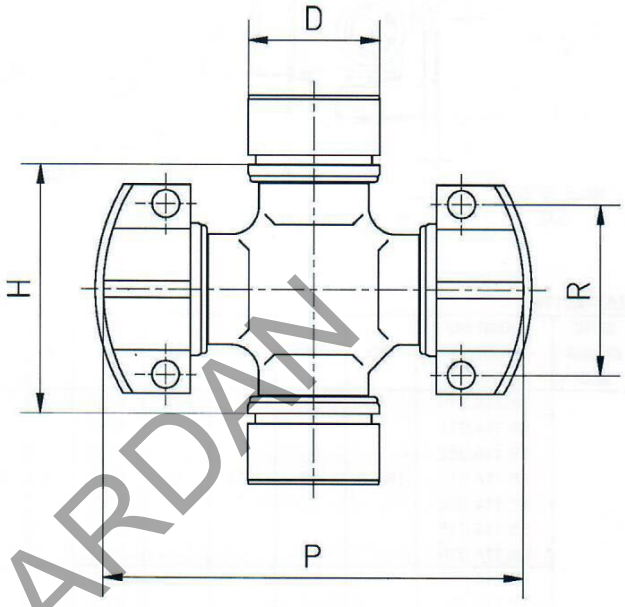


Fig. 2



KAT-13/5 23/01/2009

| SERIE BAUGR SERİ | NEW PART NO TEIL NR NEU YENİ PARÇA NO | REF | FIG | P | R | H | D | GREASE NIPPLE GRASORLUK | NOTES |
|---|---|---|---|---|---|---|---|---|---|
| 520(2C) | 45201300100 | MC-2010 | 1 | 79,22 | 33,32 | - | - | SIDE GREASE NIPPLE | 4LWT |
| | 45201300200 | MC-2020 | 1 | 79,22 | 33,32 | - | - | SIDE GREASE NIPPLE | 4LWD |
| | 45201300300 | MC-2080 | 2 | 79,22 | 33,32 | 54,74 | 25,40 | SIDE GREASE NIPPLE | 2LWD-2RDG |
| | 45201300400 | MC-2081 | 2 | 79,22 | 33,32 | 54,74 | 25,40 | GREASE NIPPLE ON BEARING CUP | 2LWD-2RDG |
| 530(3C) | 45301300100 | MC-3020 | 1 | 90,35 | 36,50 | - | - | SIDE GREASE NIPPLE | 4LWD |
| | 45301300200 | MC-3031 | 1 | 90,35 | 36,50 | - | - | GREASE NIPPLE ON BEARING CUP | 4HWD |
| 540(4C) | 45401300100 | MC-4030 | 1 | 107,82 | 36,50 | - | - | SIDE GREASE NIPPLE | 4HWD |
| | 45401300200 | MC-4090 | 2 | 107,82 | 36,50 | 77,74 | 28,57 | SIDE GREASE NIPPLE | 2HWD-2RDG |
| | 45401300300 | MC-4010 | 1 | 107,82 | 36,50 | - | - | SIDE GREASE NIPPLE | 4LWT |
| | 45401300400 | MC-4040 | 1 | 107,82 | 36,50 | - | - | SIDE GREASE NIPPLE | 2LWT-2LWD |
| 550(5C) | 45501300100 | MC-5030 | 1 | 115,05 | 42,88 | - | - | SIDE GREASE NIPPLE | 4HWD |
| | 45501300200 | MC-5050 | 1 | 115,05 | 42,88 | - | - | SIDE GREASE NIPPLE | 2LWT-2HWD |
| | 45501300300 | MC-5060 | 1 | 115,05 | 42,88 | - | - | SIDE GREASE NIPPLE | 2LWD-2HWD |
| 560(6C) | 45601300100 | MC-6030 | 1 | 140,45 | 42,88 | - | - | SIDE GREASE NIPPLE | 4HWD |
| | 45601300200 | MC-6090 | 2 | 140,45 | 42,88 | 104,70 | 33,33 | SIDE GREASE NIPPLE | 2HWD-2RDG |
| 570(7C) | 45701300100 | MC-7030 | 1 | 148,38 | 49,22 | - | - | SIDE GREASE NIPPLE | 4HWD |
| | 45701300200 | MC-7090 | 2 | 148,38 | 49,22 | 101,16 | 41,28 | SIDE GREASE NIPPLE | 2HWD-2RDG |
| 580(8C) | 45801300100 | MC-8030 | 1 | 205,50 | 49,22 | - | - | SIDE GREASE NIPPLE | 4HWD |
| | 45801300200 | MC-8090 | 2 | 205,50 | 49,22 | 162,26 | 41,28 | GREASE NIPPLE ON BEARING CUP | 2HWD-2RDG |
| 585(8,5C) | 45851300100 | MC-8530 | 1 | 165,01 | 71,44 | - | - | SIDE GREASE NIPPLE | 4HWD |
| | 45851300200 | MC-8560 | 1 | 165,01 | 71,44 | - | - | SIDE GREASE NIPPLE | 2LWD-2HWD |
| 590(9C) | 45901300100 | MC-9030 | 1 | 209,60 | 71,44 | - | - | SIDE GREASE NIPPLE | 4HWD |

# FIXED JOINTS / SCHWEISSZAPFENGELENKE / SABİT MAFSALLAR

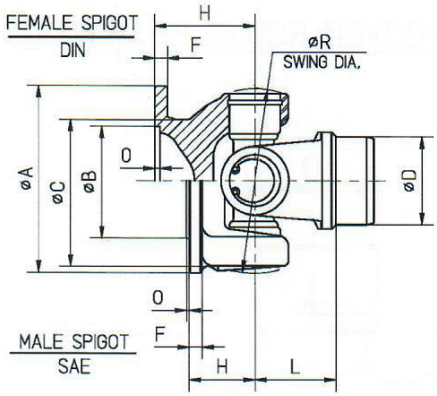


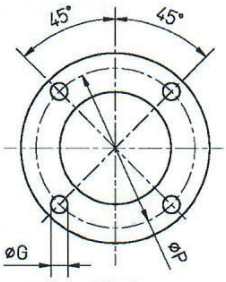


Fig. 1

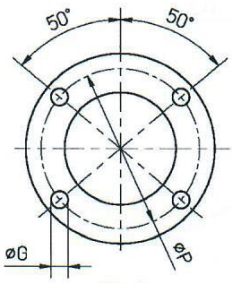


Fig. 2

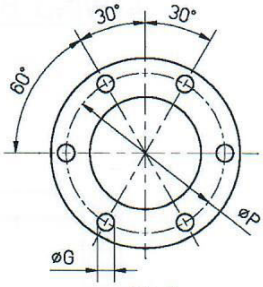


Fig. 3

**KAT-98/114** **23/12/2008**

| SERIE BAUGR SERI | JOINT NO GELENK NR MAFSAL NO | FIG | A | B | C | D | E | F | G | H | L | O | P | R | ß° | TUBE O.D.x THICK. ROHRDURCHM.xDICKE BORU ÇAPIxET KAL. |
|---|---|---|---|---|---|---|---|---|---|---|---|---|---|---|---|---|
| | 98.114.010 | | | | | 46,2 | | | | | 35,0 | | | | 17 | 2" x 0,095" |
| | 98.114.011 | | | | | 47,8 | | | | | 35,0 | | | | 17 | 2" x 0,064" |
| | 98.114.012 | | | | | 60,6 | | | | | 35,0 | | | | 17 | 2 1/2" x 0,064" |
| | 98.114.013 | DIN,1 | 90 | 47,0 | 56 | 66,9 | 4 | 5,5 | 8,1 | 40,0 | 33,3 | 2,5 | 74,5 | 76 | 17 | 2 3/4" x 0,064" |
| | 98.114.014 | | | | | 39,9 | | | | | 35,0 | | | | 17 | 1 3/4" x 0,095" |
| | 98.114.015 | | | | | 41,7 | | | | | 35,0 | | | | 17 | 1 3/4" x 0,064" |
| | 98.114.016 | | | | | 73,3 | | | | | 36,5 | | | | 17 | 3" x 0,064" |
| | 98.114.020 | | | | | 46,2 | | | | | 35,0 | | | | | 2" x 0,095" |
| | 98.114.021 | | | | | 47,8 | | | | | 35,0 | | | | | 2" x 0,064" |
| | 98.114.022 | | | | | 60,6 | | | | | 35,0 | | | | | 2 1/2" x 0,064" |
| | 98.114.023 | DIN,3 | 90 | 47,0 | 56 | 66,9 | 6 | 6,0 | 9,1 | 40,0 | 33,3 | 2,5 | 74,5 | 76 | 25 | 2 3/4" x 0,064" |
| | 98.114.024 | | | | | 39,9 | | | | | 35,0 | | | | | 1 3/4" x 0,095" |
| | 98.114.025 | | | | | 41,7 | | | | | 35,0 | | | | | 1 3/4" x 0,064" |
| | 98.114.026 | | | | | 73,3 | | | | | 36,5 | | | | | 3" x 0,064" |
| | 98.114.030 | | | | | 46,2 | | | | | 35,0 | | | | | 2" x 0,095" |
| | 98.114.031 | | | | | 47,8 | | | | | 35,0 | | | | | 2" x 0,064" |
| | 98.114.032 | | | | | 60,6 | | | | | 35,0 | | | | | 2 1/2" x 0,064" |
| | 98.114.033 | DIN,3 | 75 | 42,0 | 48 | 66,9 | 6 | 5,5 | 6,1 | 39,0 | 33,3 | 2,0 | 62,0 | 76 | 25 | 2 3/4" x 0,064" |
| | 98.114.034 | | | | | 39,9 | | | | | 35,0 | | | | | 1 3/4" x 0,095" |
| | 98.114.035 | | | | | 41,7 | | | | | 35,0 | | | | | 1 3/4" x 0,064" |
| 1140 | 98.114.036 | | | | | 73,3 | | | | | 36,5 | | | | | 3" x 0,064" |
| | 98.114.100 | | | | | 46,2 | | | | | 35,0 | | | | | 2" x 0,095" |
| | 98.114.101 | | | | | 47,8 | | | | | 35,0 | | | | | 2" x 0,064" |
| | 98.114.102 | | | | | 60,6 | | | | | 35,0 | | | | | 2 1/2" x 0,064" |
| | 98.114.103 | SAE,2 | 88 | 57,1 | - | 66,9 | 4 | 5,2 | 8,1 | 30,2 | 33,3 | 1,2 | 69,8 | 76 | 17 | 2 3/4" x 0,064" |
| | 98.114.104 | | | | | 39,9 | | | | | 35,0 | | | | | 1 3/4" x 0,095" |
| | 98.114.105 | | | | | 41,7 | | | | | 35,0 | | | | | 1 3/4" x 0,064" |
| | 98.114.106 | | | | | 73,3 | | | | | 36,5 | | | | | 3" x 0,064" |
| | 98.114.110 | | | | | 46,2 | | | | | 35,0 | | | | | 2" x 0,095" |
| | 98.114.111 | | | | | 47,8 | | | | | 35,0 | | | | | 2" x 0,064" |
| | 98.114.112 | | | | | 60,6 | | | | | 35,0 | | | | | 2 1/2" x 0,064" |
| | 98.114.113 | SAE,2 | 92 | 57,1 | - | 66,9 | 4 | 5,5 | 9,7 | 40,0 | 33,3 | 1,4 | 76,2 | 76 | 25 | 2 3/4" x 0,064" |
| | 98.114.114 | | | | | 39,9 | | | | | 35,0 | | | | | 1 3/4" x 0,095" |
| | 98.114.115 | | | | | 41,7 | | | | | 35,0 | | | | | 1 3/4" x 0,064" |
| | 98.114.116 | | | | | 73,3 | | | | | 36,5 | | | | | 3" x 0,064" |
| | 98.114.120 | | | | | 46,2 | | | | | 35,0 | | | | | 2" x 0,095" |
| | 98.114.121 | | | | | 47,8 | | | | | 35,0 | | | | | 2" x 0,064" |
| | 98.114.122 | | | | | 60,6 | | | | | 35,0 | | | | | 2 1/2" x 0,064" |
| | 98.114.123 | SAE,2 | 92 | 57,1 | - | 66,9 | 4 | 5,5 | 8,1 | 40,0 | 33,3 | 1,4 | 77,8 | 76 | 25 | 2 3/4" x 0,064" |
| | 98.114.124 | | | | | 39,9 | | | | | 35,0 | | | | | 1 3/4" x 0,095" |
| | 98.114.125 | | | | | 41,7 | | | | | 35,0 | | | | | 1 3/4" x 0,064" |
| | 98.114.126 | | | | | 73,3 | | | | | 36,5 | | | | | 3" x 0,064" |

E= NUMBER OF HOLES / LOCHANZAHL / DELİK SAYISI
ß= JOINT ANGLE / BEUGEWINKEL / MAFSAL AÇISI
O= SPIGIT DEPTH / ZENTRIERBOHRUNGTIEFE / SPİGOT DERİNLİĞİ

## FIXED JOINTS / SCHWEISSZAPFENGELENKE / SABİT MAFSALLAR



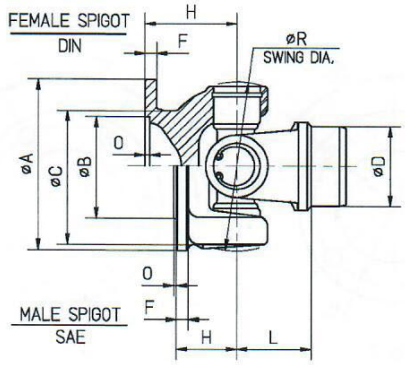


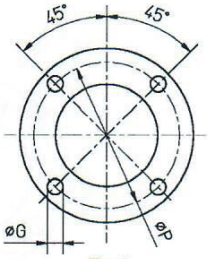


Fig. 1

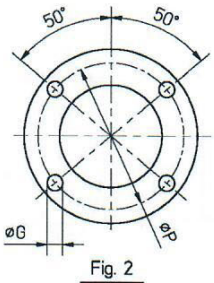


Fig. 2

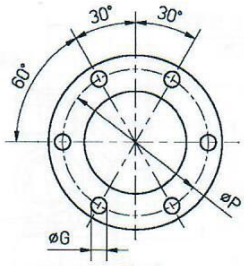


Fig. 3

**KAT-98/130** **23/12/2008**

| SERIE BAUGR SERI | JOINT NO GELENK NR MAFSAL NO | FIG | A | B | C | D | E | F | G | H | L | O | P | R | ß° | TUBE O.D.x THICK. ROHRDURCHM.xDICKE BORU ÇAPIxET KAL. |
|---|---|---|---|---|---|---|---|---|---|---|---|---|---|---|---|---|
| | 98.130.010 | | | | | 46,2 | | | | | 44,5 | | | | 20 | 2" x 0,095" |
| | 98.130.011 | | | | | 47,8 | | | | | 44,5 | | | | 20 | 2" x 0,064" |
| | 98.130.012 | | | | | 60,6 | | | | | 44,5 | | | | 20 | 2 1/2" x 0,064" |
| | 98.130.013 | DIN, 1 | 90 | 47,0 | - | 66,9 | 4 | 8,0 | 8,1 | 40,5 | 44,5 | 2,5 | 74,5 | 90,5 | 20 | 2 3/4" x 0,064" |
| | 98.130.014 | | | | | 73,3 | | | | | 44,5 | | | | 20 | 3" x 0,064" |
| | 98.130.015 | | | | | 97,9 | | | | | 44,5 | | | | 17 | 4" x 0,080" |
| | 98.130.016 | | | | | 45,1 | | | | | 44,5 | | | | 20 | Ø51x3 |
| | 98.130.017 | | | | | 59,9 | | | | | 44,5 | | | | 20 | Ø64x2 |
| | 98.130.100 | | | | | 46,2 | | | | | 44,5 | | | | 20 | 2" x 0,095" |
| | 98.130.101 | | | | | 47,8 | | | | | 44,5 | | | | 20 | 2" x 0,064" |
| | 98.130.102 | | | | | 60,6 | | | | | 44,5 | | | | 20 | 2 1/2" x 0,064" |
| | 98.130.103 | SAE, 2 | 92 | 57,1 | - | 66,9 | 4 | 8,0 | 8,1 | 40,5 | 44,5 | 1,4 | 69,9 | 90,5 | 20 | 2 3/4" x 0,064" |
| | 98.130.104 | | | | | 73,3 | | | | | 44,5 | | | | 20 | 3" x 0,064" |
| | 98.130.105 | | | | | 97,9 | | | | | 44,5 | | | | 17 | 4" x 0,080" |
| | 98.130.106 | | | | | 45,1 | | | | | 44,5 | | | | 20 | Ø51x3 |
| | 98.130.107 | | | | | 59,9 | | | | | 44,5 | | | | 20 | Ø64x2 |
| | 98.130.110 | | | | | 46,2 | | | | | 44,5 | | | | 20 | 2" x 0,095" |
| | 98.130.111 | | | | | 47,8 | | | | | 44,5 | | | | 20 | 2" x 0,064" |
| | 98.130.112 | | | | | 60,6 | | | | | 44,5 | | | | 20 | 2 1/2" x 0,064" |
| | 98.130.113 | SAE, 2 | 92 | 57,1 | - | 66,9 | 4 | 6,7 | 9,8 | 35,0 | 44,5 | 1,4 | 76,2 | 90,5 | 20 | 2 3/4" x 0,064" |
| | 98.130.114 | | | | | 73,3 | | | | | 44,5 | | | | 20 | 3" x 0,064" |
| | 98.130.115 | | | | | 97,9 | | | | | 44,5 | | | | 17 | 4" x 0,080" |
| | 98.130.116 | | | | | 45,1 | | | | | 44,5 | | | | 20 | Ø51x3 |
| 1300 | 98.130.117 | | | | | 59,9 | | | | | 44,5 | | | | 20 | Ø64x2 |
| | 98.130.120 | | | | | 46,2 | | | | | 44,5 | | | | 20 | 2" x 0,095" |
| | 98.130.121 | | | | | 47,8 | | | | | 44,5 | | | | 20 | 2" x 0,064" |
| | 98.130.122 | | | | | 60,6 | | | | | 44,5 | | | | 20 | 2 1/2" x 0,064" |
| | 98.130.123 | SAE, 2 | 97 | 60,3 | - | 66,9 | 4 | 6,7 | 9,8 | 35,0 | 44,5 | 1,4 | 79,4 | 90,5 | 20 | 2 3/4" x 0,064" |
| | 98.130.124 | | | | | 73,3 | | | | | 44,5 | | | | 20 | 3" x 0,064" |
| | 98.130.125 | | | | | 97,9 | | | | | 44,5 | | | | 17 | 4" x 0,080" |
| | 98.130.126 | | | | | 45,1 | | | | | 44,5 | | | | 20 | Ø51x3 |
| | 98.130.127 | | | | | 59,9 | | | | | 44,5 | | | | 20 | Ø64x2 |
| | 98.130.130 | | | | | 46,2 | | | | | 44,5 | | | | 20 | 2" x 0,095" |
| | 98.130.131 | | | | | 47,8 | | | | | 44,5 | | | | 20 | 2" x 0,064" |
| | 98.130.132 | | | | | 60,6 | | | | | 44,5 | | | | 20 | 2 1/2" x 0,064" |
| | 98.130.133 | SAE, 2 | 97 | 60,3 | - | 66,9 | 4 | 6,7 | 10,2 | 35,0 | 44,5 | 1,4 | 79,4 | 90,5 | 20 | 2 3/4" x 0,064" |
| | 98.130.134 | | | | | 73,3 | | | | | 44,5 | | | | 20 | 3" x 0,064" |
| | 98.130.135 | | | | | 97,9 | | | | | 44,5 | | | | 17 | 4" x 0,080" |
| | 98.130.136 | | | | | 45,1 | | | | | 44,5 | | | | 20 | Ø51x3 |
| | 98.130.137 | | | | | 59,9 | | | | | 44,5 | | | | 20 | Ø64x2 |
| | 98.130.140 | | | | | 46,2 | | | | | 44,5 | | | | 20 | 2" x 0,095" |
| | 98.130.141 | | | | | 47,8 | | | | | 44,5 | | | | 20 | 2" x 0,064" |
| | 98.130.142 | | | | | 60,6 | | | | | 44,5 | | | | 20 | 2 1/2" x 0,064" |
| | 98.130.143 | SAE, 2 | 88 | 57,1 | - | 66,9 | 4 | 8,0 | 8,1 | 40,5 | 44,5 | 1,4 | 69,9 | 90,5 | 20 | 2 3/4" x 0,064" |
| | 98.130.144 | | | | | 73,3 | | | | | 44,5 | | | | 20 | 3" x 0,064" |
| | 98.130.145 | | | | | 97,9 | | | | | 44,5 | | | | 17 | 4" x 0,080" |
| | 98.130.146 | | | | | 45,1 | | | | | 44,5 | | | | 20 | Ø51x3 |
| | 98.130.147 | | | | | 59,9 | | | | | 44,5 | | | | 20 | Ø64x2 |

E= NUMBER OF HOLES / LOCHANZAHL / DELİK SAYISI
ß= JOINT ANGLE / BEUGEWINKEL / MAFSAL AÇISI
O= SPIGIT DEPTH / ZENTRIERBOHRUNGTIEFE / SPİGOT DERİNLİĞİ

# FIXED JOINTS / SCHWEISSZAPFENGELENKE / SABİT MAFSALLAR

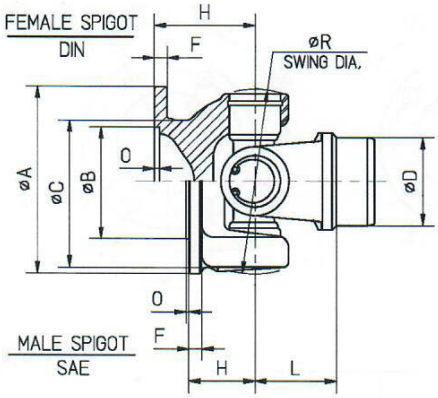


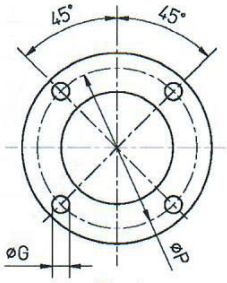


Fig. 1

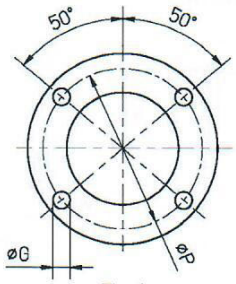


Fig. 2

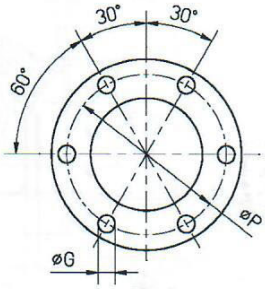


Fig. 3

**KAT-98/131** **16/02/2009**

| SERIE BAUGR SERI | JOINT NO GELENK NR MAFSAL NO | FIG | A | B | C | D | E | F | G | H | L | O | P | R | ß° | TUBE O.D.x THICK. ROHRDURCHM.xDICKE BORU ÇAPIxET KAL. |
|---|---|---|---|---|---|---|---|---|---|---|---|---|---|---|---|---|
| | 98.131.020 | | | | | 46,2 | | | | | 42,9 | | | | 20 | 2" x 0,095" |
| | 98.131.021 | | | | | 46,2 | | | | | 49,2 | | | | 30 | 2" x 0,095" |
| | 98.131.022 | | | | | 60,6 | | | | | 47,0 | | | | 30 | 2 1/2" x 0,064" |
| | 98.131.023 | | | | | 60,6 | | | | | 55,0 | | | | 20 | 2 1/2" x 0,064" |
| | 98.131.024 | DIN,3 | 100 | 57,0 | 66 | 66,9 | 6 | 6,8 | 8,1 | 53,0 | 55,0 | 2,5 | 84,0 | 97 | 20 | 2 3/4" x 0,064" |
| | 98.131.025 | | | | | 73,3 | | | | | 55,0 | | | | 30 | 3" x 0,064" |
| | 98.131.026 | | | | | 71,6 | | | | | 55,0 | | | | 30 | 3" x 0,095" |
| | 98.131.027 | | | | | 26,2 | | | | | 55,0 | | | | 20 | 1 1/4"x 0,120" |
| | 98.131.028 | | | | | 39,9 | | | | | 49,2 | | | | 30 | 1 3/4" x 0,095" |
| | 98.131.030 | | | | | 46,2 | | | | | 42,9 | | | | 20 | 2" x 0,095" |
| | 98.131.031 | | | | | 46,2 | | | | | 49,2 | | | | 20 | 2" x 0,095" |
| | 98.131.032 | | | | | 60,6 | | | | | 47,0 | | | | 20 | 2 1/2" x 0,064" |
| | 98.131.033 | | | | | 60,6 | | | | | 55,0 | | | | 20 | 2 1/2" x 0,064" |
| | 98.131.034 | DIN,1 | 90 | 47,0 | 56 | 66,9 | 4 | 6,8 | 8,1 | 50,0 | 55,0 | 2,5 | 74,5 | 97 | 20 | 2 3/4" x 0,064" |
| | 98.131.035 | | | | | 73,3 | | | | | 55,0 | | | | 20 | 3" x 0,064" |
| | 98.131.036 | | | | | 71,6 | | | | | 55,0 | | | | 20 | 3" x 0,095" |
| | 98.131.037 | | | | | 26,2 | | | | | 55,0 | | | | 20 | 1 1/4"x 0,120" |
| | 98.131.038 | | | | | 39,9 | | | | | 49,2 | | | | 20 | 1 3/4" x 0,095" |
| | 98.131.040 | | | | | 46,2 | | | | | 42,9 | | | | 20 | 2" x 0,095" |
| | 98.131.041 | | | | | 46,2 | | | | | 49,2 | | | | 30 | 2" x 0,095" |
| | 98.131.042 | | | | | 60,6 | | | | | 47,0 | | | | 30 | 2 1/2" x 0,064" |
| | 98.131.043 | | | | | 60,6 | | | | | 55,0 | | | | 20 | 2 1/2" x 0,064" |
| 1310 | 98.131.044 | DIN,3 | 100 | 57,0 | 66 | 66,9 | 6 | 6,8 | 6,1 | 53,0 | 55,0 | 2,5 | 84,0 | 97 | 20 | 2 3/4" x 0,064" |
| | 98.131.045 | | | | | 73,3 | | | | | 55,0 | | | | 30 | 3" x 0,064" |
| | 98.131.046 | | | | | 71,6 | | | | | 55,0 | | | | 30 | 3" x 0,095" |
| | 98.131.047 | | | | | 26,2 | | | | | 55,0 | | | | 20 | 1 1/4"x 0,120" |
| | 98.131.048 | | | | | 39,9 | | | | | 49,2 | | | | 30 | 1 3/4" x 0,095" |
| | 98.131.100 | | | | | 46,2 | | | | | 42,9 | | | | 20 | 2" x 0,095" |
| | 98.131.101 | | | | | 46,2 | | | | | 49,2 | | | | 20 | 2" x 0,095" |
| | 98.131.102 | | | | | 60,6 | | | | | 47,0 | | | | 20 | 2 1/2" x 0,064" |
| | 98.131.103 | | | | | 60,6 | | | | | 55,0 | | | | 20 | 2 1/2" x 0,064" |
| | 98.131.104 | SAE,1 | 97 | 60,3 | - | 66,9 | 4 | 6,7 | 9,7 | 35,0 | 55,0 | 1,2 | 79,3 | 97 | 20 | 2 3/4" x 0,064" |
| | 98.131.105 | | | | | 73,3 | | | | | 55,0 | | | | 20 | 3" x 0,064" |
| | 98.131.106 | | | | | 71,6 | | | | | 55,0 | | | | 20 | 3" x 0,095" |
| | 98.131.107 | | | | | 26,2 | | | | | 55,0 | | | | 20 | 1 1/4"x 0,120" |
| | 98.131.108 | | | | | 39,9 | | | | | 49,2 | | | | 20 | 1 3/4" x 0,095" |
| | 98.131.110 | | | | | 46,2 | | | | | 42,9 | | | | 20 | 2" x 0,095" |
| | 98.131.111 | | | | | 46,2 | | | | | 49,2 | | | | 30 | 2" x 0,095" |
| | 98.131.112 | | | | | 60,6 | | | | | 47,0 | | | | 30 | 2 1/2" x 0,064" |
| | 98.131.113 | | | | | 60,6 | | | | | 55,0 | | | | 30 | 2 1/2" x 0,064" |
| | 98.131.114 | SAE,1 | 97 | 60,3 | - | 66,9 | 4 | 6,6 | 9,7 | 41,4 | 55,0 | 1,4 | 79,3 | 97 | 30 | 2 3/4" x 0,064" |
| | 98.131.115 | | | | | 73,3 | | | | | 55,0 | | | | 30 | 3" x 0,064" |
| | 98.131.116 | | | | | 71,6 | | | | | 55,0 | | | | 30 | 3" x 0,095" |
| | 98.131.117 | | | | | 26,2 | | | | | 55,0 | | | | 30 | 1 1/4"x 0,120" |
| | 98.131.118 | | | | | 39,9 | | | | | 49,2 | | | | 30 | 1 3/4" x 0,095" |

E= NUMBER OF HOLES / LOCHANZAHL / DELİK SAYISI
ß= JOINT ANGLE / BEUGEWINKEL / MAFSAL AÇISI
O= SPIGIT DEPTH / ZENTRIERBOHRUNGTIEFE / SPİGOT DERİNLİĞİ

## FIXED JOINTS / SCHWEISSZAPFENGELENKE / SABİT MAFSALLAR



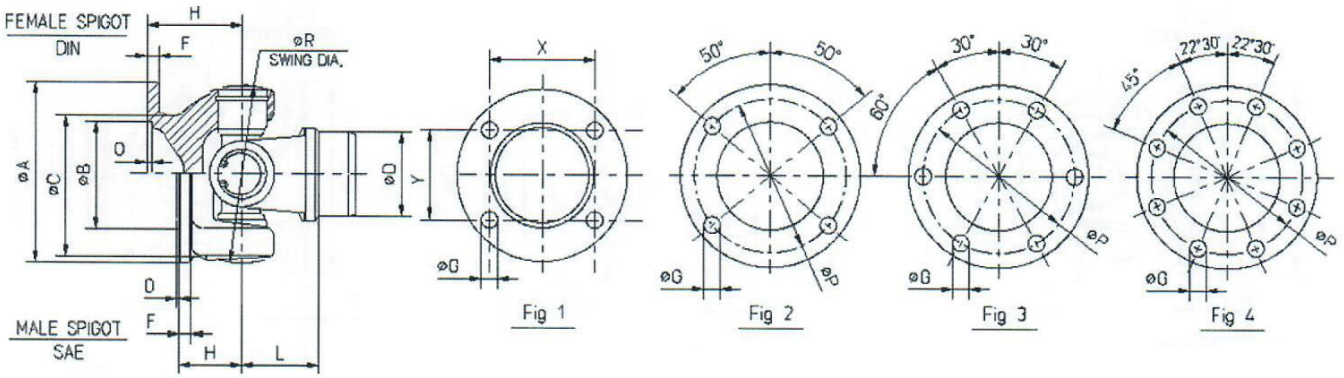


**KAT-98/141** **24/12/2008**

| SERIE BAUGR SERI | JOINT NO GELENK NR MAFSAL NO | FIG. | A | B | C | D | E | F | G | X | Y | H | L | O | P | R | ß° | TUBE O.D.x THICK. ROHRDURCHM.xDICKE BORU ÇAPIxET KAL. |
|---|---|---|---|---|---|---|---|---|---|---|---|---|---|---|---|---|---|---|
| | 98.141.010 | | | | | 71,6 | | | | | | | 54,0 | | | | | 3" x 0,095" |
| | 98.141.011 | DIN,4 | 120 | 75,0 | 81 | 84,6 | 8 | 8,0 | 10,2 | | | 56,0 | 54,0 | 2,8 | 101,5 | 122 | 20 | 3 1/2" x 0,095" |
| | 98.141.012 | | | | | 45,5 | | | | | | | 52,0 | | | | | 2" x 0,109" |
| | 98.141.013 | | | | | 44,1 | | | | | | | 54,0 | | | | | 52 x 4 |
| | 98.141.020 | | | | | 71,6 | | | | | | | 54,0 | | | | | 3" x 0,095" |
| | 98.141.021 | DIN,4 | 120 | 75,0 | 81 | 84,6 | 8 | 8,0 | 8,1 | | | 56,0 | 54,0 | 2,8 | 101,5 | 122 | 20 | 3 1/2" x 0,095" |
| | 98.141.022 | | | | | 45,5 | | | | | | | 52,0 | | | | | 2" x 0,109" |
| | 98.141.023 | | | | | 44,1 | | | | | | | 54,0 | | | | | 52 x 4 |
| | 98.141.030 | | | | | 71,6 | | | | | | | 54,0 | | | | | 3" x 0,095" |
| | 98.141.031 | DIN,3 | 100,0 | 57,0 | 68 | 84,6 | 6 | 8,0 | 8,1 | - | - | 70,0 | 54,0 | 3,0 | 84,0 | 122 | 20 | 3 1/2" x 0,095" |
| | 98.141.032 | | | | | 45,5 | | | | | | | 52,0 | | | | | 2" x 0,109" |
| | 98.141.033 | | | | | 44,1 | | | | | | | 54,0 | | | | | 52 x 4 |
| | 98.141.100 | | | | | 71,6 | | | | | | | 54,0 | | | | | 3" x 0,095" |
| | 98.141.101 | SAE,2 | 114 | 69,8 | - | 84,6 | 4 | 7,5 | 11,3 | | | 43,0 | 54,0 | 1,2 | 95,3 | 122 | 20 | 3 1/2" x 0,095" |
| | 98.141.102 | | | | | 45,5 | | | | | | | 52,0 | | | | | 2" x 0,109" |
| | 98.141.103 | | | | | 44,1 | | | | | | | 54,0 | | | | | 52 x 4 |
| | 98.141.110 | | | | | 71,6 | | | | | | | 54,0 | | | | | 3" x 0,095" |
| | 98.141.111 | SAE,2 | 146 | 95,2 | - | 84,6 | 4 | 11,5 | 13,0 | | | 50,8 | 54,0 | 1,4 | 120,7 | 122 | 30 | 3 1/2" x 0,095" |
| | 98.141.112 | | | | | 45,5 | | | | | | | 52,0 | | | | | 2" x 0,109" |
| 1410 | 98.141.113 | | | | | 44,1 | | | | | | | 54,0 | | | | | 52 x 4 |
| | 98.141.120 | | | | | 71,6 | | | | | | | 54,0 | | | | | 3" x 0,095" |
| | 98.141.121 | SAE,2 | 114 | 69,8 | - | 84,6 | 4 | 7,5 | 12,2 | | | 42,9 | 54,0 | 1,4 | 95,3 | 122 | 20 | 3 1/2" x 0,095" |
| | 98.141.122 | | | | | 45,5 | | | | | | | 52,0 | | | | | 2" x 0,109" |
| | 98.141.123 | | | | | 44,1 | | | | | | | 54,0 | | | | | 52 x 4 |
| | 98.141.130 | | | | | 71,6 | | | | | | | 54,0 | | | | | 3" x 0,095" |
| | 98.141.131 | SAE,2 | 146 | 95,2 | - | 84,6 | 4 | 11,5 | 14,2 | | | 50,8 | 54,0 | 1,4 | 120,7 | 122 | 30 | 3 1/2" x 0,095" |
| | 98.141.132 | | | | | 45,5 | | | | | | | 52,0 | | | | | 2" x 0,109" |
| | 98.141.133 | | | | | 44,1 | | | | | | | 54,0 | | | | | 52 x 4 |
| | 98.141.140 | | | | | 71,6 | | | | | | | 54,0 | | | | | 3" x 0,095" |
| | 98.141.141 | SAE,1 | 120,0 | 80,0 | 79,0 | 84,6 | 4 | 8,5 | 10,3 | 80,902 | 58,778 | 55,0 | 54,0 | 2,0 | - | 122 | 20 | 3 1/2" x 0,095" |
| | 98.141.142 | | | | | 45,5 | | | | | | | 52,0 | | | | | 2" x 0,109" |
| | 98.141.143 | | | | | 44,1 | | | | | | | 54,0 | | | | | 52 x 4 |
| | 98.141.150 | | | | | 71,6 | | | | | | | 54,0 | | | | | 3" x 0,095" |
| | 98.141.151 | SAE,1 | 120,0 | 80,0 | 79,0 | 84,6 | 4 | 8,5 | 12,3 | 80,902 | 58,778 | 55,0 | 54,0 | 2,0 | - | 122 | 20 | 3 1/2" x 0,095" |
| | 98.141.152 | | | | | 45,5 | | | | | | | 52,0 | | | | | 2" x 0,109" |
| | 98.141.153 | | | | | 44,1 | | | | | | | 54,0 | | | | | 52 x 4 |
| | 98.141.160 | | | | | 71,6 | | | | | | | 54,0 | | | | | 3" x 0,095" |
| | 98.141.161 | SAE,2 | 120,0 | 70,0 | 82 | 84,6 | 4 | 9,0 | 12,2 | - | - | 55,0 | 54,0 | 1,4 | 100 | 122 | 20 | 3 1/2" x 0,095" |
| | 98.141.162 | | | | | 45,5 | | | | | | | 52,0 | | | | | 2" x 0,109" |
| | 98.141.163 | | | | | 44,1 | | | | | | | 54,0 | | | | | 52 x 4 |

E= NUMBER OF HOLES / LOCHANZAHL / DELİK SAYISI
ß= JOINT ANGLE / BEUGEWINKEL / MAFSAL AÇISI
O= SPIGIT DEPTH / ZENTRIERBOHRUNGTIEFE / SPİGOT DERİNLİĞİ

# FIXED JOINTS / SCHWEISSZAPFENGELENKE / SABİT MAFSALLAR

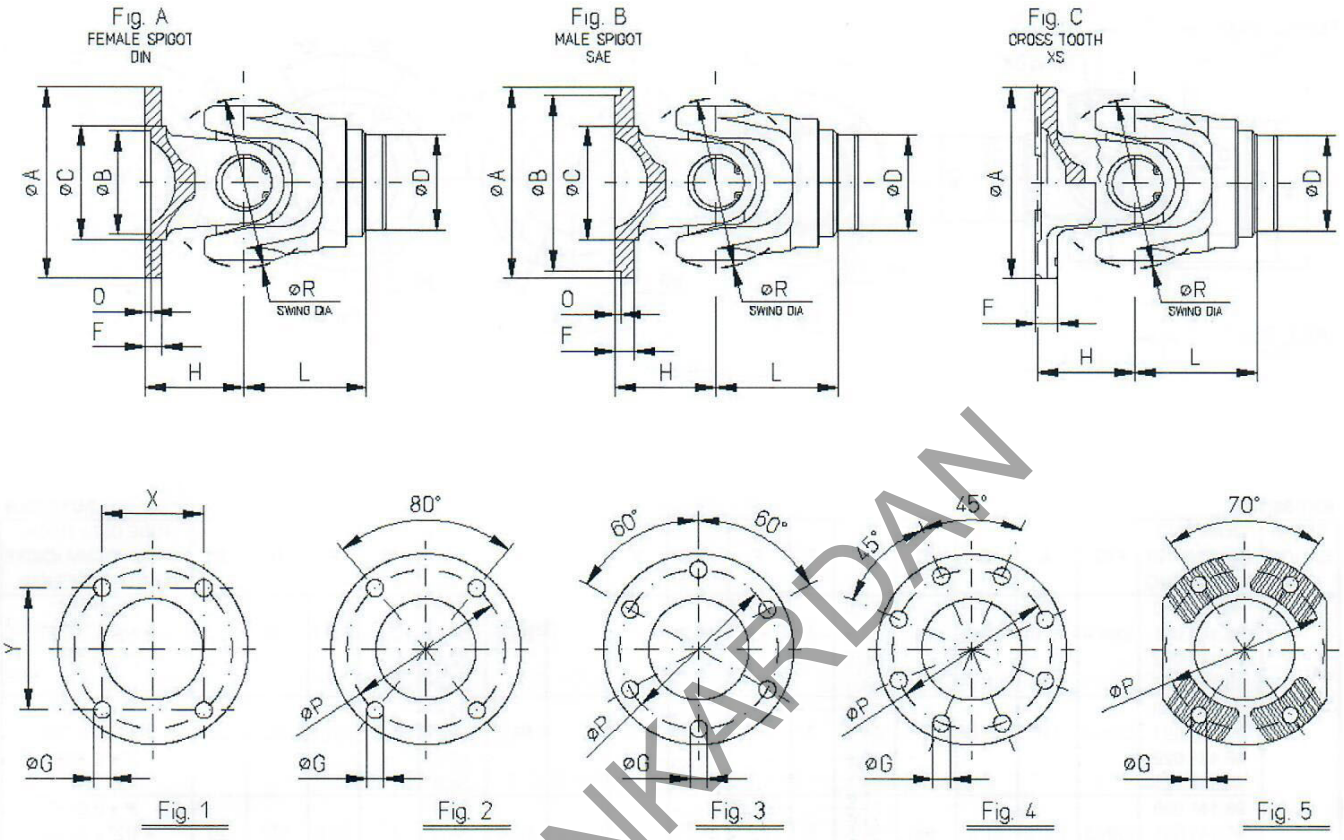




KAT-98/148 24/12/2008

| SERIE BAUGR SERI | JOINT NO GELENK NR MAFSAL NO | FIG. | A | B | C | D | E | F | G | X | Y | H | L | O | P | R | ß° | TUBE O.D.x THICK. ROHRDURCHM.xDICKE BORU ÇAPIxET KAL. |
|---|---|---|---|---|---|---|---|---|---|---|---|---|---|---|---|---|---|---|
| 1480 | 98.148.010 | DIN,4 | 120 | 75,0 | 81 | 71,6 | 8 | 9,0 | 10,2 | - | - | 65,0 | 51,6 | 2,5 | 101,5 | 129 | 24 | 3" x 0,095" |
| | 98.148.011 | | | | | 84,3 | | | | | | | 51,6 | | | | | 3 1/2" x 0,095" |
| | 98.148.020 | DIN,4 | 120 | 75,0 | 81 | 71,6 | 8 | 8,0 | 8,2 | - | - | 65,0 | 51,6 | 2,5 | 101,5 | 129 | 24 | 3" x 0,095" |
| | 98.148.021 | | | | | 84,3 | | | | | | | 51,6 | | | | | 3 1/2" x 0,095" |
| | 98.148.100 | SAE,2 | 146 | 95,2 | - | 71,6 | 4 | 9,0 | 12,9 | - | - | 50,8 | 51,6 | 1,4 | 120,7 | 129 | 22 | 3" x 0,095" |
| | 98.148.101 | | | | | 84,3 | | | | | | | 51,6 | | | | | 3 1/2" x 0,095" |
| | 98.148.120 | SAE,2 | 146 | 95,2 | - | 71,6 | 4 | 9,0 | 14,3 | - | - | 50,8 | 51,6 | 1,4 | 120,7 | 129 | 22 | 3" x 0,095" |
| | 98.148.121 | | | | | 84,3 | | | | | | | 51,6 | | | | | 3 1/2" x 0,095" |
| | 98.148.130 | SAE,2 | 125 | 70,0 | - | 71,6 | 4 | 9,0 | 12,2 | - | - | 65,0 | 51,6 | 1,4 | 100,0 | 129 | 24 | 3" x 0,095" |
| | 98.148.131 | | | | | 84,3 | | | | | | | 51,6 | | | | | 3 1/2" x 0,095" |
| | 98.148.140 | SAE,1 | 121 | 80,0 | - | 71,6 | 4 | 9,0 | 12,2 | 80,902 | 58,778 | 65,0 | 51,6 | 1,8 | - | 129 | 24 | 3" x 0,095" |
| | 98.148.141 | | | | | 84,3 | | | | | | | 51,6 | | | | | 3 1/2" x 0,095" |
| | 98.148.150 | SAE,1 | 133 | 80,0 | - | 71,6 | 4 | 8,0 | 12,2 | 95,26 | 55,0 | 62,0 | 51,6 | 2,6 | - | 129 | 24 | 3" x 0,095" |
| | 98.148.151 | | | | | 84,3 | | | | | | | 51,6 | | | | | 3 1/2" x 0,095" |
| | 98.148.160 | SAE,2 | 116 | 69,8 | - | 71,6 | 4 | 9,0 | 12,2 | - | - | 65,0 | 51,6 | 1,4 | 95,3 | 129 | 25 | 3" x 0,095" |
| | 98.148.161 | | | | | 84,3 | | | | | | | 51,6 | | | | | 3 1/2" x 0,095" |
| | 98.148.200 | XS,5 | 120 | - | - | 71,6 | 4 | 15,5 | 11,2 | | | 63,5 | 51,6 | - | 100,0 | 129 | 27 | 3" x 0,095" |
| | 98.148.201 | | | | | 84,6 | | | | | | | 51,6 | | | | | 3 1/2" x 0,095" |
| | 98.148.210 | XS,5 | 120 | - | - | 71,6 | 4 | 15,5 | 11,2 | | | 45,0 | 51,6 | - | 100,0 | 129 | 25 | 3" x 0,095" |
| | 98.148.211 | | | | | 84,6 | | | | | | | 51,6 | | | | | 3 1/2" x 0,095" |
| | 98.148.220 | XS,5 | 120 | - | - | 71,6 | 4 | 15,5 | 11,2 | | | 75,0 | 51,6 | - | 100,0 | 129 | 30 | 3" x 0,095" |
| | 98.148.221 | | | | | 84,6 | | | | | | | 51,6 | | | | | 3 1/2" x 0,095" |

E= NUMBER OF HOLES / LOCHANZAHL / DELİK SAYISI
ß= JOINT ANGLE / BEUGEWINKEL / MAFSAL AÇISI
O= SPIGIT DEPTH / ZENTRIERBOHRUNGTIEFE / SPİGOT DERİNLİĞİ

## FIXED JOINTS / SCHWEISSZAPFENGELENKE / SABİT MAFSALLAR



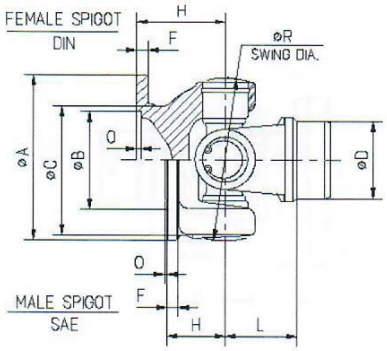


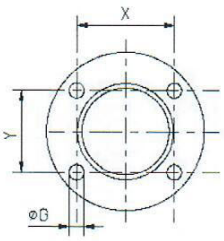


Fig 1

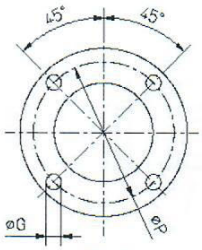


Fig 2

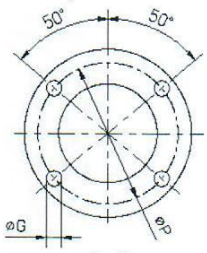


Fig 3

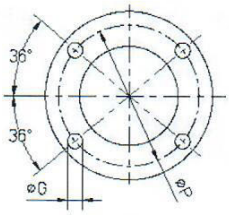


Fig. 4

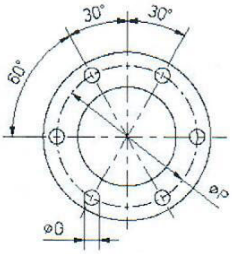


Fig. 5

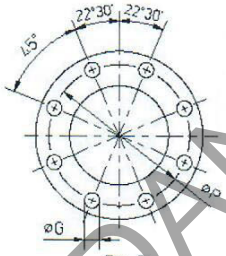


Fig. 6

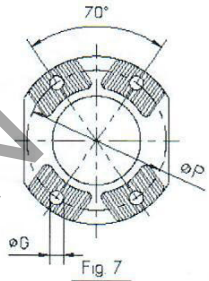


Fig. 7

**KAT-98/151** **24/12/2008**

| SERIE BAUGR SERI | JOINT NO GELENK NR MAFSAL NO | FIG. | A | B | C | D | E | F | G | X | Y | H | L | O | P | R | ß° | TUBE O.D.x THICK. ROHRDURCHM.xDICKE BORU ÇAPIxET KAL. |
|---|---|---|---|---|---|---|---|---|---|---|---|---|---|---|---|---|---|---|
| 1510 | 98.151.010 | DIN,6 | 120 | 75,0 | 81 | 71,6 | 8 | 8,0 | 10,2 | - | - | 75,0 | 71,4 | 2,8 | 101,5 | 136 | 22 | 3" x 0,095" |
| | 98.151.011 | | | | | 84,6 | | | | | | | 71,4 | | | | 22 | 3 1/2" x 0,095" |
| | 98.151.020 | DIN,6 | 150 | 90,0 | 103 | 71,6 | 8 | 11,0 | 12,2 | - | - | 90,0 | 71,4 | 3,4 | 130,0 | 136 | 22 | 3" x 0,095" |
| | 98.151.021 | | | | | 84,6 | | | | | | | 71,4 | | | | 22 | 3 1/2" x 0,095" |
| | 98.151.030 | DIN,6 | 150 | 90,0 | 103 | 71,6 | 8 | 11,0 | 10,2 | - | - | 90,0 | 71,4 | 3,4 | 130,0 | 136 | 22 | 3" x 0,095" |
| | 98.151.031 | | | | | 84,6 | | | | | | | 71,4 | | | | 22 | 3 1/2" x 0,095" |
| | 98.151.040 | DIN,6 | 165 | 95,0 | 109 | 71,6 | 8 | 11,0 | 16,2 | - | - | 90,0 | 71,4 | 3,4 | 140,0 | 136 | 22 | 3" x 0,095" |
| | 98.151.041 | | | | | 84,6 | | | | | | | 71,4 | | | | 22 | 3 1/2" x 0,095" |
| | 98.151.050 | DIN,6 | 120 | 75,0 | 80 | 71,6 | 8 | 8 | 8,1 | - | - | 75,0 | 71,4 | 3,0 | 101,5 | 136 | 22 | 3" x 0,095" |
| | 98.151.051 | | | | | 84,6 | | | | | | | 71,4 | | | | 22 | 3 1/2" x 0,095" |
| | 98.151.100 | SAE,3 | 146 | 95,2 | - | 71,6 | 4 | 9,1 | 12,8 | - | - | 63,5 | 71,4 | 1,6 | 120,7 | 136 | 22 | 3" x 0,095" |
| | 98.151.101 | | | | | 84,6 | | | | | | | 71,4 | | | | 22 | 3 1/2" x 0,095" |
| | 98.151.110 | SAE,3 | 146 | 95,2 | - | 71,6 | 4 | 9,1 | 14,4 | - | - | 63,5 | 71,4 | 1,6 | 120,7 | 136 | 22 | 3" x 0,095" |
| | 98.151.111 | | | | | 84,6 | | | | | | | 71,4 | | | | 22 | 3 1/2" x 0,095" |
| | 98.151.120 | SAE,6 | 130 | 82,5 | 90,0 | 71,6 | 8 | 9,0 | 10,1 | - | - | 75,0 | 71,4 | 2,8 | 112,0 | 136 | 22 | 3" x 0,095" |
| | 98.151.121 | | | | | 84,6 | | | | | | | 71,4 | | | | 22 | 3 1/2" x 0,095" |
| | 98.151.130 | SAE,3 | 146 | 95,2 | - | 71,6 | 4 | 9,1 | 14,2 | - | - | 63,5 | 71,4 | 1,8 | 120,7 | 136 | 22 | 3" x 0,095" |
| | 98.151.131 | | | | | 84,6 | | | | | | | 71,4 | | | | 22 | 3 1/2" x 0,095" |
| | 98.151.200 | SAE,1 | 133,0 | 80,0 | 84 | 71,6 | 4 | 9,0 | 12,3 | 95,26 | 55,0 | 75,0 | 71,4 | 2,6 | - | 136 | 22 | 3" x 0,095" |
| | 98.151.201 | | | | | 84,6 | | | | | | | 71,4 | | | | 22 | 3 1/2" x 0,095" |
| | 98.151.210 | SAE,5 | 120,0 | 80,0 | 82,5 | 71,6 | 6 | 7,0 | 10,1 | - | - | 75,0 | 71,4 | 2,0 | 101,6 | 136 | 22 | 3" x 0,095" |
| | 98.151.211 | | | | | 84,6 | | | | | | | 71,4 | | | | 22 | 3 1/2" x 0,095" |
| | 98.151.210 | SAE,4 | 150,0 | 90,0 | 100 | 71,6 | 4 | 10,0 | 14,2 | - | - | 88,0 | 71,4 | 3,2 | 120,0 | 136 | 22 | 3" x 0,095" |
| | 98.151.211 | | | | | 84,6 | | | | | | | 71,4 | | | | 22 | 3 1/2" x 0,095" |
| 1630 | 98.163.010 | DIN,6 | 150 | 90,0 | 103 | 83,4 | 8 | 11,0 | 12,2 | - | - | 90,0 | 81,0 | 3,4 | 130,0 | 136 | 22 | 90x3,5 mm |
| | 98.163.100 | SAE,6 | 175 | 168,2 | 127 | 83,4 | 8 | 9,5 | 9,7 | - | - | 82,5 | 81,0 | 2,0 | 155,5 | 136 | 35 | 90x3,5 mm |
| | 98.163.200 | XS,7 | 120 | - | - | 83,4 | 4 | 16,5 | 11,2 | - | - | 71,5 | 81,0 | - | 100,0 | 136 | 30 | 90x3,5 mm |
| 381 | 98.381.200 | | | | | 85,1 | | | | | | | 80 | | | | 25 | Ø90x2,5 mm |
| | 98.381.201 | XS,7 | 120 | - | - | 84,3 | 4 | 15,5 | 11,1 | - | - | 70 | 80 | - | 100,0 | 126 | 25 | Ø3,5"x,095" |
| | 98.381.202 | | | | | 83,1 | | | | | | | 80 | | | | 25 | Ø90x3,5 mm |
| | 98.381.210 | | | | | 85,1 | | | | | | | 80 | | | | 22 | Ø90x2,5 mm |
| | 98.381.211 | XS,7 | 120 | - | - | 84,3 | 4 | 16,0 | 11,1 | - | - | 65 | 80 | - | 100,0 | 126 | 22 | Ø3,5"x,095" |
| | 98.381.212 | | | | | 83,1 | | | | | | | 80 | | | | 22 | Ø90x3,5 mm |
| | 98.381.220 | | | | | 85,1 | | | | | | | 80 | | | | 10 | Ø90x2,5 mm |
| | 98.381.221 | XS,7 | 120 | - | - | 84,3 | 4 | 16,5 | 11,1 | - | - | 52,5 | 80 | - | 100,0 | 126 | 10 | Ø3,5"x,095" |
| | 98.381.222 | | | | | 83,1 | | | | | | | 80 | | | | 10 | Ø90x3,5 mm |

E= NUMBER OF HOLES / LOCHANZAHL / DELİK SAYISI
ß= JOINT ANGLE / BEUGEWINKEL / MAFSAL AÇISI
O= SPIGIT DEPTH / ZENTRIERBOHRUNGTIEFE / SPİGOT DERİNLİĞİ

# FIXED JOINTS / SCHWEISSZAPFENGELENKE / SABİT MAFSALLAR

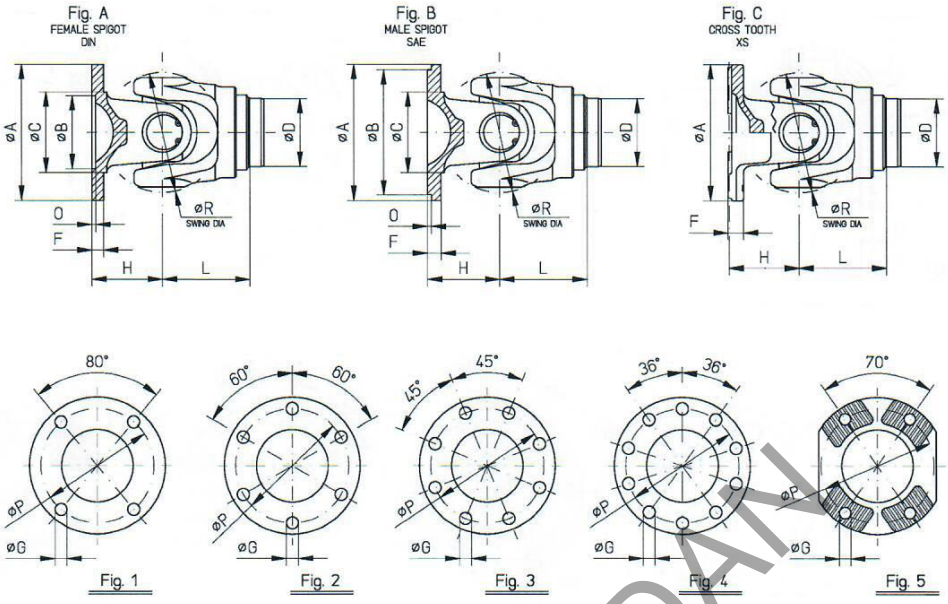


**KAT-98/385** **23/12/2008**

| SERIE BAUGR SERI | JOINT NO GELENK NR MAFSAL NO | FIG | A | B | C | D | E | F | G | H | L | O | P | R | ß° | TUBE O.D.x THICK. ROHRDURCHM.xDICKE BORU ÇAPIxET KAL. |
|---|---|---|---|---|---|---|---|---|---|---|---|---|---|---|---|---|
| 385 | 98.385.010 | DIN,3 | 150 | 90,0 | 104 | 82,1 | 8 | 12,0 | 12,2 | 75,0 | 101,0 | 3,5 | 130,0 | 148 | 24 | Ø92x5 mm |
| | 98.385.011 | | | | | 84,3 | | | | | 101,0 | | | | 24 | 3½"x,095" |
| | 98.385.020 | DIN,3 | 165 | 95,0 | 109 | 82,1 | 8 | 12,0 | 16,2 | 82,5 | 101,0 | 3,0 | 140,0 | 148 | 24 | Ø92x5 mm |
| | 98.385.021 | | | | | 84,3 | | | | | 101,0 | | | | 24 | 3½"x,095" |
| | 98.385.030 | DIN,3 | 180 | 110,0 | 119 | 82,1 | 8 | 12,0 | 14,2 | 82,5 | 101,0 | 3,5 | 155,5 | 148 | 24 | Ø92x5 mm |
| | 98.385.031 | | | | | 84,3 | | | | | 101,0 | | | | 24 | 3½"x,095" |
| | 98.385.040 | DIN,3 | 180 | 110,0 | 119 | 82,1 | 8 | 12,0 | 16,2 | 82,5 | 101,0 | 3,5 | 155,5 | 148 | 24 | Ø92x5 mm |
| | 98.385.041 | | | | | 84,3 | | | | | 101,0 | | | | 24 | 3½"x,095" |
| | 98.385.050 | DIN,3 | 180 | 110,0 | 119 | 82,1 | 8 | 12,0 | 12,2 | 82,5 | 101,0 | 3,5 | 155,5 | 148 | 24 | Ø92x5 mm |
| | 98.385.051 | | | | | 84,3 | | | | | 101,0 | | | | 24 | 3½"x,095" |
| | 98.385.100 | SAE,3 | 175 | 168,2 | 127 | 82,1 | 8 | 10,5 | 9,7 | 82,5 | 101,0 | 1,6 | 155,5 | 148 | 24 | Ø92x5 mm |
| | 98.385.101 | | | | | 84,3 | | | | | 101,0 | | | | 24 | 3½"x,095" |
| | 98.385.200 | XS,5 | 150 | - | - | 82,1 | 4 | 18,5 | 13,1 | 75,0 | 101,0 | - | 130,0 | 148 | 24 | Ø92x5 mm |
| | 98.385.201 | | | | | 84,3 | | | | | 101,0 | | | | 24 | 3½"x,095" |
| | 98.385.210 | XS,5 | 180 | - | - | 82,1 | 4 | 20,5 | 15,1 | 90,0 | 101,0 | - | 150,0 | 148 | 24 | Ø92x5 mm |
| | 98.385.211 | | | | | 84,3 | | | | | 101,0 | | | | 24 | 3½"x,095" |
| 389 | 98.389.200 | | | | | 90,1 | | | | | 116,0 | | | | 27 | Ø100x5 mm |
| | 98.389.201 | XS,5 | 150 | - | - | 112,1 | 4 | 17,5 | 13,1 | 85,0 | 90,0 | - | 130,0 | 159 | 25 | Ø120x4 mm |
| | 98.389.202 | | | | | 112,1 | | | | | 86,0 | | | | 25 | Ø120x4 mm |
| | 98.389.210 | | | | | 90,1 | | | | | 116,0 | | | | 30 | Ø100x5 mm |
| | 98.389.211 | XS,5 | 180 | - | - | 112,1 | 4 | 19,5 | 15,1 | 92,5 | 90,0 | - | 150,0 | 159 | 25 | Ø120x4 mm |
| | 98.389.212 | | | | | 112,1 | | | | | 86,0 | | | | 25 | Ø120x4 mm |
| | 98.389.220 | | | | | 90,1 | | | | | 116,0 | | | | 44 | Ø100x5 mm |
| | 98.389.221 | XS,5 | 150 | - | - | 112,1 | 4 | 17,5 | 15,1 | 100,0 | 90,0 | - | 150,0 | 159 | 25 | Ø120x4 mm |
| | 98.389.222 | | | | | 112,1 | | | | | 86,0 | | | | 25 | Ø120x4 mm |
| | 98.389.230 | | | | | 90,1 | | | | | 116,0 | | | | 36 | Ø100x5 mm |
| | 98.389.231 | XS,5 | 165 | - | - | 112,1 | 4 | 17,5 | 13,1 | 97,0 | 90,0 | - | 140,0 | 159 | 25 | Ø120x4 mm |
| | 98.389.232 | | | | | 112,1 | | | | | 86,0 | | | | 25 | Ø120x4 mm |
| 395 | 98.395.100 | DIN,4 | 180 | 110,0 | 124 | 98,1 | 10 | 14,0 | 16,2 | 95 | 116,0 | 3,5 | 155,5 | 178 | 25 | Ø110x6 mm |
| | 98.395.101 | | | | | 108,1 | | | | | 116,0 | | | | 25 | Ø120x6 mm |
| | 98.395.110 | DIN,3 | 180 | 110,0 | 124 | 98,1 | 8 | 14,0 | 14,2 | 95 | 116,0 | 3,5 | 155,5 | 178 | 25 | Ø110x6 mm |
| | 98.395.111 | | | | | 108,1 | | | | | 116,0 | | | | 25 | Ø120x6 mm |
| | 98.395.120 | DIN,4 | 180 | 110,0 | 127 | 98,1 | 10 | 14,0 | 16,2 | 115 | 116,0 | 3,0 | 155,5 | 178 | 25 | Ø110x6 mm |
| | 98.395.121 | | | | | 108,1 | | | | | 116,0 | | | | 25 | Ø120x6 mm |
| | 98.395.200 | XS,5 | 180 | - | - | 98,1 | 4 | 17,5 | 15,1 | 95 | 116,0 | - | 150,0 | 178 | 25 | Ø110x6 mm |
| | 98.395.201 | | | | | 108,1 | | | | | 116,0 | | | | 25 | Ø120x6 mm |
| 446 | 98.446.200 | XS,5 | 180 | - | - | 112,1 | 4 | 17,5 | 15,1 | 87 | 90,0 | - | 150,0 | 170 | 27 | Ø120x4 mm |
| | 98.446.201 | XS,5 | 150 | - | - | 112,1 | 4 | 17,5 | 13,1 | 87 | 90,0 | - | 130,0 | 170 | 27 | Ø120x4 mm |
| 468 | 98.468.200 | XS,5 | 180 | - | - | 98,1 | 4 | 19,5 | 15,1 | 100 | 126,0 | - | 150,0 | 178 | 22 | Ø110x6 mm |
| | 98.468.201 | XS,5 | 150 | - | - | 130,1 | 4 | 19,5 | 15,1 | 100 | 145,0 | - | 150,0 | 178 | 22 | Ø140x5 mm |

E= NUMBER OF HOLES / LOCHANZAHL / DELİK SAYISI
ß= JOINT ANGLE / BEUGEWINKEL / MAFSAL AÇISI
O= SPIGIT DEPTH / ZENTRIERBOHRUNGTIEFE / SPİGOT DERİNLİĞİ

## FIXED JOINTS / SCHWEISSZAPFENGELENKE / SABİT MAFSALLAR



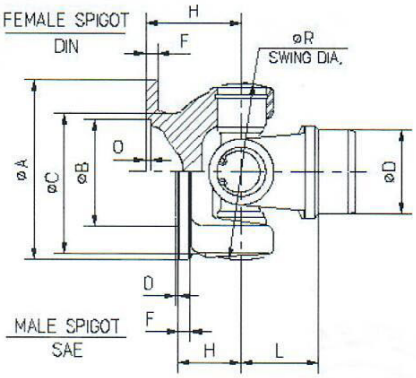


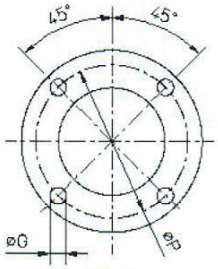


Fig 1

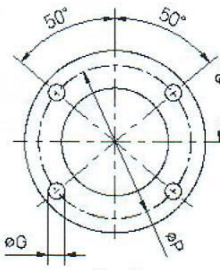


Fig 2

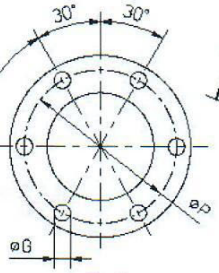


Fig 3

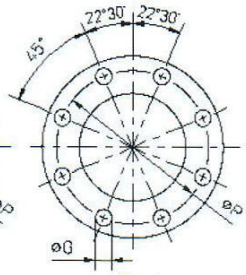


Fig 4

**KAT-98/420** **23/12/2008**

| SERIE BAUGR SERI | JOINT NO GELENK NR MAFSAL NO | FIG | A | B | C | D | E | F | G | H | L | O | P | R | ß° | TUBE O.D.x THICK. ROHRDURCHM.xDICKE BORU ÇAPIxET KAL. |
|---|---|---|---|---|---|---|---|---|---|---|---|---|---|---|---|---|
| 287 | 98.287.010 | DIN.3 | 100 | 57,0 | 65 | 44,1 | 6 | 6,8 | 8,1 | 58,0 | 55,0 | 3,0 | 84,0 | 100 | 35 | Ø50x3 |
| | 98.287.011 | | | | | 71,6 | | | | | 45,0 | | | | 25 | 3"x,095" |
| | 98.287.020 | DIN,4 | 100 | 57,0 | 65 | 44,1 | 8 | 6,8 | 8,1 | 58,0 | 55,0 | 3,0 | 84,0 | 100 | 35 | Ø50x3 |
| | 98.287.021 | | | | | 71,6 | | | | | 45,0 | | | | 25 | 3"x,095" |
| | 98.287.030 | DIN,4 | 120 | 75,0 | 81 | 44,1 | 8 | 8,0 | 8,1 | 54,0 | 55,0 | 3,0 | 101,5 | 100 | 30 | Ø50x3 |
| | 98.287.031 | | | | | 71,6 | | | | | 45,0 | | | | 25 | 3"x,095" |
| 420 | 98.420.010 | | | | | 73,3 | | | | | 45,0 | | | | 25 | Ø3"x,064" |
| | 98.420.011 | DIN,3 | 100 | 57,0 | 65 | 71,6 | 6 | 6,8 | 8,2 | 58,0 | 45,0 | 3,0 | 84,0 | 98 | 25 | Ø3"x,095" |
| | 98.420.012 | | | | | 44,1 | | | | | 55,0 | | | | 35 | Ø52x4 mm |
| | 98.420.013 | | | | | 46,1 | | | | | 55,0 | | | | 35 | Ø54x4 mm |
| | 98.420.020 | | | | | 73,3 | | | | | 45,0 | | | | 25 | Ø3"x,064" |
| | 98.420.021 | DIN,4 | 120 | 75,0 | 81 | 71,6 | 8 | 8,0 | 10,2 | 54,0 | 45,0 | 3,0 | 101,5 | 98 | 25 | Ø3"x,095" |
| | 98.420.022 | | | | | 44,1 | | | | | 55,0 | | | | 30 | Ø52x4 mm |
| | 98.420.023 | | | | | 46,1 | | | | | 55,0 | | | | 30 | Ø54x4 mm |
| | 98.420.100 | | | | | 73,3 | | | | | 45,0 | | | | 25 | Ø3"x,064" |
| | 98.420.101 | SAE,2 | 116 | 69,8 | - | 71,6 | 4 | 8,0 | 11,3 | 40,0 | 45,0 | 1,4 | 95,2 | 98 | 25 | Ø3"x,095" |
| | 98.420.102 | | | | | 44,1 | | | | | 55,0 | | | | 25 | Ø52x4 mm |
| | 98.420.103 | | | | | 46,1 | | | | | 55,0 | | | | 25 | Ø54x4 mm |
| | 98.420.110 | | | | | 73,3 | | | | | 45,0 | | | | 25 | Ø3"x,064" |
| | 98.420.111 | SAE,2 | 116 | 69,8 | - | 71,6 | 4 | 8,0 | 12,3 | 40,0 | 45,0 | 1,4 | 95,2 | 98 | 25 | Ø3"x,095" |
| | 98.420.112 | | | | | 44,1 | | | | | 55,0 | | | | 25 | Ø52x4 mm |
| | 98.420.113 | | | | | 46,1 | | | | | 55,0 | | | | 25 | Ø54x4 mm |
| | 98.420.120 | | | | | 73,3 | | | | | 45,0 | | | | 25 | Ø3"x,064" |
| | 98.420.121 | SAE,1 | 100 | 60,3 | 61 | 71,6 | 4 | 6,8 | 10,2 | 58,0 | 45,0 | 1,4 | 79,4 | 98 | 25 | Ø3"x,095" |
| | 98.420.122 | | | | | 44,1 | | | | | 55,0 | | | | 35 | Ø52x4 mm |
| | 98.420.123 | | | | | 46,1 | | | | | 55,0 | | | | 35 | Ø54x4 mm |
| | 98.420.130 | | | | | 73,3 | | | | | 45,0 | | | | 25 | Ø3"x,064" |
| | 98.420.131 | SAE,2 | 116 | 69,8 | - | 71,6 | 4 | 9,5 | 12,3 | 53,0 | 45,0 | 1,4 | 95,2 | 98 | 25 | Ø3"x,095" |
| | 98.420.132 | | | | | 44,1 | | | | | 55,0 | | | | 30 | Ø52x4 mm |
| | 98.420.133 | | | | | 46,1 | | | | | 55,0 | | | | 30 | Ø54x4 mm |
| | 98.420.140 | | | | | 44,1 | | | | | 45,0 | | | | 25 | Ø3"x,064" |
| | 98.420.141 | SAE,2 | 116 | 60,0 | - | 73,3 | 4 | 8,0 | 10,2 | 40,0 | 45,0 | 1,3 | 90,0 | 98 | 25 | Ø3"x,095" |
| | 98.420.142 | | | | | 71,6 | | | | | 55,0 | | | | 35 | Ø52x4 mm |
| | 98.420.143 | | | | | 55,0 | | | | | 46,1 | | | | 35 | Ø54x4 mm |

E= NUMBER OF HOLES / LOCHANZAHL / DELİK SAYISI
ß= JOINT ANGLE / BEUGEWINKEL / MAFSAL AÇISI
O= SPIGIT DEPTH / ZENTRIERBOHRUNGTIEFE / SPİGOT DERİNLİĞİ

# FIXED JOINTS / SCHWEISSZAPFENGELENKE / SABİT MAFSALLAR

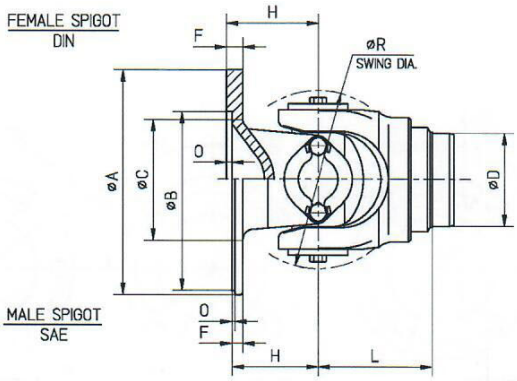


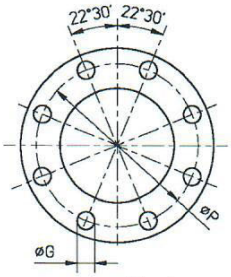


Fig. 1

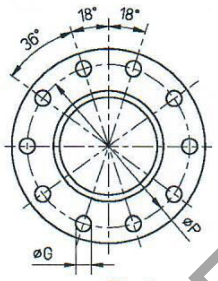


Fig. 2

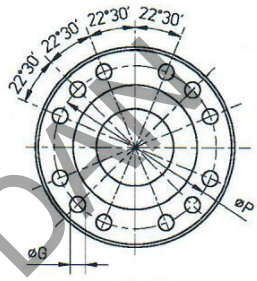


Fig. 3

**KAT-98/171** **24/12/2008**

| SERIE BAUGR SERI | JOINT NO GELENK NR MAFSAL NO | FIG. | A | B | C | D | E | F | G | H | L | O | P | R | ß° | TUBE O.D.x THICK. ROHRDURCHM.xDICKE BORU ÇAPIxET KAL. |
|---|---|---|---|---|---|---|---|---|---|---|---|---|---|---|---|---|
| 1710 | 98.171.010 | | | | | 83,2 | | | | | 100,0 | | | | 33 | 3,5" x 0,120" |
| | 98.171.011 | DIN,1 | 165 | 95,0 | 109 | 80,0 | 8 | 12,0 | 16,2 | 98,0 | 100,0 | 3,4 | 140,0 | 200 | 33 | 3,5" x 0,188" |
| | 98.171.012 | | | | | 95,0 | | | | | 77,0 | | | | 22 | 4" x 0,134" |
| | 98.171.013 | | | | | 82,1 | | | | | 100,0 | | | | 33 | Ø92 x 5 |
| | 98.171.100 | | | | | 83,2 | | | | | 100,0 | | | | 33 | 3,5" x 0,120" |
| | 98.171.101 | SAE,1 | 203 | 196,8 | 160 | 80,0 | 8 | 9,5 | 9,7 | 76,2 | 100,0 | 2,4 | 184,1 | 200 | 33 | 3,5" x 0,188" |
| | 98.171.102 | | | | | 95,0 | | | | | 77,0 | | | | 22 | 4" x 0,134" |
| | 98.171.103 | | | | | 82,1 | | | | | 100,0 | | | | 33 | Ø92 x 5 |
| | 98.171.110 | | | | | 83,2 | | | | | 100,0 | | | | 33 | 3,5" x 0,120" |
| | 98.171.111 | SAE,3 | 203 | 196,8 | 160 | 80,0 | 12 | 9,5 | 11,3 | 76,2 | 100,0 | 2,4 | 184,1 | 200 | 33 | 3,5" x 0,188" |
| | 98.171.112 | | | | | 95,0 | | | | | 77,0 | | | | 22 | 4" x 0,134" |
| | 98.171.113 | | | | | 82,1 | | | | | 100,0 | | | | 33 | Ø92 x 5 |
| | 98.171.120 | | | | | 83,2 | | | | | 100,0 | | | | 33 | 3,5" x 0,120" |
| | 98.171.121 | SAE,1 | 175 | 168,2 | 127 | 80,0 | 8 | 10,5 | 9,7 | 98,0 | 100,0 | 2,4 | 155,6 | 200 | 33 | 3,5" x 0,188" |
| | 98.171.122 | | | | | 95,0 | | | | | 77,0 | | | | 22 | 4" x 0,134" |
| | 98.171.123 | | | | | 82,1 | | | | | 100,0 | | | | 33 | Ø92 x 5 |
| | 98.171.130 | | | | | 83,2 | | | | | 100,0 | | | | 33 | 3,5" x 0,120" |
| | 98.171.131 | SAE,1 | 203 | 196,8 | 160 | 80,0 | 8 | 9,5 | 11,3 | 76,2 | 100,0 | 2,4 | 184,1 | 200 | 33 | 3,5" x 0,188" |
| | 98.171.132 | | | | | 95,0 | | | | | 77,0 | | | | 22 | 4" x 0,134" |
| | 98.171.133 | | | | | 82,1 | | | | | 100,0 | | | | 33 | Ø92 x 5 |
| | 98.171.140 | | | | | 83,2 | | | | | 100,0 | | | | 33 | 3,5" x 0,120" |
| | 98.171.141 | SAE,1 | 203 | 163,5 | 160 | 80,0 | 8 | 9,5 | 9,8 | 74,5 | 100,0 | 1,7 | 184,1 | 200 | 33 | 3,5" x 0,188" |
| | 98.171.142 | | | | | 95,0 | | | | | 77,0 | | | | 22 | 4" x 0,134" |
| | 98.171.143 | | | | | 82,1 | | | | | 100,0 | | | | 33 | Ø92 x 5 |
| | 98.171.150 | | | | | 83,2 | | | | | 100,0 | | | | 33 | 3,5" x 0,120" |
| | 98.171.151 | SAE,1 | 203 | 196,8 | 160 | 80,0 | 8 | 9,5 | 10,2 | 76,2 | 100,0 | 1,7 | 184,1 | 200 | 33 | 3,5" x 0,188" |
| | 98.171.152 | | | | | 95,0 | | | | | 77,0 | | | | 22 | 4" x 0,134" |
| | 98.171.153 | | | | | 82,1 | | | | | 100,0 | | | | 33 | Ø92 x 5 |
| 1810 | 98.181.010 | DIN,2 | 180 | 110,0 | 119 | 80,0 | 10 | 12,0 | 16,2 | 102,5 | 92,0 | 3,0 | 155,5 | 217 | 33 | 3,5" x 0,188" |
| | 98.181.011 | | | | | 98,1 | | | | | 92,0 | | | | | 110 x 6 mm |
| | 98.181.100 | SAE,3 | 203 | 196,8 | 157 | 80,0 | 12 | 11,2 | 11,3 | 86,0 | 92,0 | 3,0 | 184,1 | 217 | 33 | 3,5" x 0,188" |
| | 98.181.101 | | | | | 98,1 | | | | | 92,0 | | | | | 110 x 6 mm |
| | 98.181.110 | SAE,2 | 203 | 196,8 | 157 | 80,0 | 8 | 11,2 | 9,7 | 86,0 | 92,0 | 3,0 | 184,1 | 217 | 33 | 3,5" x 0,188" |
| | 98.181.111 | | | | | 98,1 | | | | | 92,0 | | | | | 110 x 6 mm |

E= NUMBER OF HOLES / LOCHANZAHL / DELİK SAYISI
ß= JOINT ANGLE / BEUGEWINKEL / MAFSAL AÇISI
O= SPIGIT DEPTH / ZENTRIERBOHRUNGTIEFE / SPİGOT DERİNLİĞİ

## SLIP JOINTS / WELLENGELENKE / KAYICI MAFSALLAR



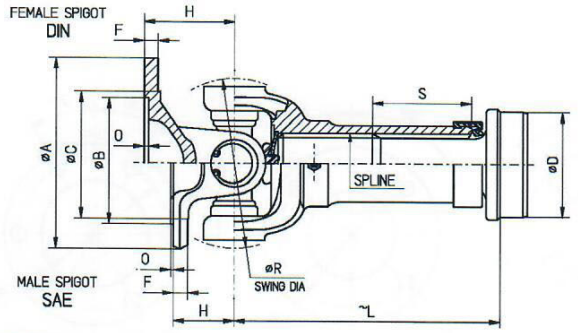


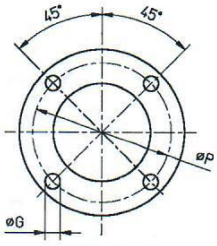


Fig. 1

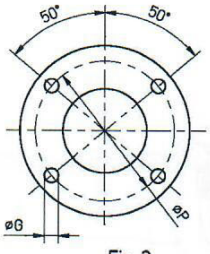


Fig. 2

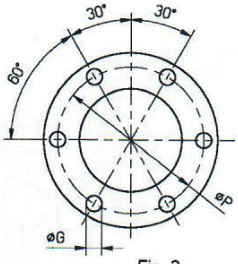


Fig. 3

**KAT-99/114** **24/12/2008**

| SERIE BAUGR SERi | JOINT NO GELENK NR MAFSAL NO | FIG. | A | B | C | D | E | F | G | H | L | O | P | R | S | ß° | SPLINE | TUBE O.D.x THICK. ROHRDURCHM.xDICKE BORU ÇAPIxET KAL. |
|---|---|---|---|---|---|---|---|---|---|---|---|---|---|---|---|---|---|---|
| 1140 | 99.114.010 | | | | | - | | | | | - | | | | | | | (*) |
| | 99.114.011 | | | | | 47,8 | | | | | 127 | | | | | | | 2" x 0,064" |
| | 99.114.012 | | | | | 60,6 | | | | | 127 | | | | | | | 2 1/2" x 0,064" |
| | 99.114.013 | DIN,1 | 90 | 47,0 | 56 | 66,9 | 4 | 5,5 | 8,1 | 40,0 | 134 | 2,5 | 74,5 | 76 | 40 | 17 | SAE 1 1/16"x16C | 2 3/4" x 0,064" |
| | 99.114.014 | | | | | 39,9 | | | | | 127 | | | | | | | 1 3/4" x 0,095" |
| | 99.114.015 | | | | | 46,2 | | | | | 127 | | | | | | | 2" x 0,095" |
| | 99.114.020 | | | | | - | | | | | - | | | | | | | (*) |
| | 99.114.021 | | | | | 47,8 | | | | | 127 | | | | | | | 2" x 0,064" |
| | 99.114.022 | | | | | 60,6 | | | | | 127 | | | | | | | 2 1/2" x 0,064" |
| | 99.114.023 | DIN,3 | 75 | 42,0 | 48 | 66,9 | 6 | 5,5 | 6,1 | 39,0 | 134 | 2,0 | 62,0 | 76 | 40 | 25 | SAE 1 1/16"x16C | 2 3/4" x 0,064" |
| | 99.114.024 | | | | | 39,9 | | | | | 127 | | | | | | | 1 3/4" x 0,095" |
| | 99.114.025 | | | | | 46,2 | | | | | 127 | | | | | | | 2" x 0,095" |
| | 99.114.030 | | | | | - | | | | | - | | | | | | | (*) |
| | 99.114.031 | | | | | 47,8 | | | | | 127 | | | | | | | 2" x 0,064" |
| | 99.114.032 | | | | | 60,6 | | | | | 127 | | | | | | | 2 1/2" x 0,064" |
| | 99.114.033 | DIN,3 | 90 | 47,0 | 56 | 66,9 | 6 | 6,0 | 9,1 | 40,0 | 134 | 2,5 | 74,5 | 76 | 40 | 25 | SAE 1 1/16"x16C | 2 3/4" x 0,064" |
| | 99.114.034 | | | | | 39,9 | | | | | 127 | | | | | | | 1 3/4" x 0,095" |
| | 99.114.035 | | | | | 46,2 | | | | | 127 | | | | | | | 2" x 0,095" |
| | 99.114.100 | | | | | - | | | | | - | | | | | | | (*) |
| | 99.114.101 | | | | | 47,8 | | | | | 127 | | | | | | | 2" x 0,064" |
| | 99.114.102 | | | | | 60,6 | | | | | 127 | | | | | | | 2 1/2" x 0,064" |
| | 99.114.103 | SAE,2 | 88 | 57,1 | - | 66,9 | 4 | 5,2 | 8,1 | 30,2 | 134 | 1,2 | 69,8 | 76 | 40 | 17 | SAE 1 1/16"x16C | 2 3/4" x 0,064" |
| | 99.114.104 | | | | | 39,9 | | | | | 127 | | | | | | | 1 3/4" x 0,095" |
| | 99.114.105 | | | | | 46,2 | | | | | 127 | | | | | | | 2" x 0,095" |
| | 99.114.110 | | | | | - | | | | | - | | | | | | | (*) |
| | 99.114.111 | | | | | 47,8 | | | | | 127 | | | | | | | 2" x 0,064" |
| | 99.114.112 | | | | | 60,6 | | | | | 127 | | | | | | | 2 1/2" x 0,064" |
| | 99.114.113 | SAE,2 | 92 | 57,1 | - | 66,9 | 4 | 5,5 | 9,7 | 40,0 | 134 | 1,4 | 76,2 | 76 | 40 | 25 | SAE 1 1/16"x16C | 2 3/4" x 0,064" |
| | 99.114.114 | | | | | 39,9 | | | | | 127 | | | | | | | 1 3/4" x 0,095" |
| | 99.114.115 | | | | | 46,2 | | | | | 127 | | | | | | | 2" x 0,095" |
| | 99.114.120 | | | | | - | | | | | - | | | | | | | (*) |
| | 99.114.121 | | | | | 47,8 | | | | | 127 | | | | | | | 2" x 0,064" |
| | 99.114.122 | | | | | 60,6 | | | | | 127 | | | | | | | 2 1/2" x 0,064" |
| | 99.114.123 | SAE,2 | 92 | 57,1 | - | 66,9 | 4 | 5,5 | 8,1 | 40,0 | 134 | 1,4 | 77,8 | 76 | 40 | 25 | SAE 1 1/16"x16C | 2 3/4" x 0,064" |
| | 99.114.124 | | | | | 39,9 | | | | | 127 | | | | | | | 1 3/4" x 0,095" |
| | 99.114.125 | | | | | 46,2 | | | | | 127 | | | | | | | 2" x 0,095" |
| | 99.130.010 | | | | | - | | | | | - | | | | - | | | (*) |
| | 99.130.011 | | | | | 60,6 | | | | | 157 | | | | 55 | | | 2 1/2" x 0,064" |
| | 99.130.012 | | | | | 46,2 | | | | | 157 | | | | 55 | | | 2" x 0,095" |
| | 99.130.013 | | | | | 71,6 | | | | | 157 | | | | 55 | | | 3" x 0,095" |
| | 99.130.014 | DIN, 1 | 90 | 47,0 | - | 73,3 | 4 | 8,0 | 8,1 | 40,5 | 157 | 2,5 | 74,5 | 90,5 | 55 | 20 | SAE Ø35,0x16C | 3" x 0,064" |
| | 99.130.015 | | | | | 72,3 | | | | | 157 | | | | 55 | | | 3" x 0,083" |
| 1300 | 99.130.016 | | | | | 54,1 | | | | | 157 | | | | 55 | | | Ø60 x 3 |
| | 99.130.017 | | | | | 46,7 | | | | | 157 | | | | 55 | | | 2" x 0,080" |
| | 99.130.018 | | | | | 46,1 | | | | | 157 | | | | 55 | | | Ø54 x 4 |
| | 99.130.200 | | | | | - | | | | | - | | | | - | | | (*) |
| | 99.130.201 | | | | | 60,6 | | | | | 157 | | | | 55 | | | 2 1/2" x 0,064" |
| | 99.130.202 | SAE, 2 | 92 | 57,1 | - | 46,2 | 4 | 8,0 | 8,1 | 40,5 | 157 | 1,4 | 69,88 | 90,5 | 55 | 20 | SAE Ø35,0x16C | 2" x 0,095" |
| | 99.130.203 | | | | | 71,6 | | | | | 157 | | | | 55 | | | 3" x 0,095" |
| | 99.130.204 | | | | | 73,3 | | | | | 157 | | | | 55 | | | 3" x 0,064" |

E= NUMBER OF HOLES / LOCHANZAHL / DELİK SAYISI
ß= JOINT ANGLE / BEUGEWINKEL / MAFSAL AÇISI
O= SPIGIT DEPTH / ZENTRIERBOHRUNGTIEFE / SPİGOT DERİNLİĞİ
(*) WITHOUT SLIP STUB SHAFT / OHNE WELLENZAPFEN / KAYICI MIL HARIC

## SLIP JOINTS / WELLENGELENKE / KAYICI MAFSALLAR

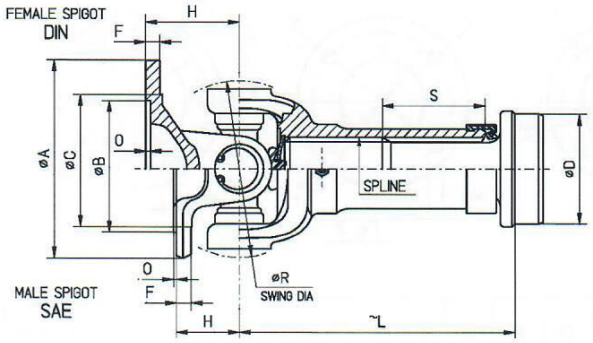


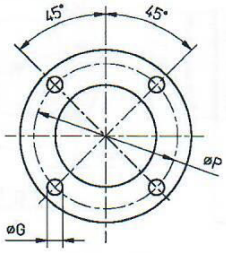


Fig. 1

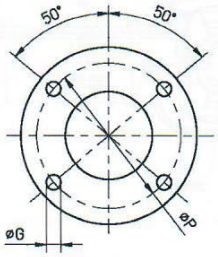


Fig. 2

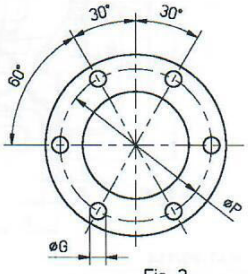


Fig. 3

**KAT-99/130** **25/12/2008**

| SERIE BAUGR SERi | JOINT NO GELENK NR MAFSAL NO | FIG. | A | B | C | D | E | F | G | H | L | O | P | R | S | ß° | SPLINE | TUBE O.D.x THICK. ROHRDURCHM.xDICKE BORU ÇAPIxET KAL. |
|---|---|---|---|---|---|---|---|---|---|---|---|---|---|---|---|---|---|---|
| | 99.130.210 | | | | | - | | | | | - | | | | - | | | (*) |
| | 99.130.211 | | | | | 60,6 | | | | | 157 | | | | 55 | | | 2 1/2" x 0,064" |
| | 99.130.212 | SAE, 2 | 92 | 57,1 | - | 46,2 | 4 | 6,7 | 9,8 | 35,0 | 157 | 1,4 | 76,2 | 90,5 | 55 | 20 | SAE Ø35,0x16C | 2" x 0,095" |
| | 99.130.213 | | | | | 71,6 | | | | | 157 | | | | 55 | | | 3" x 0,095" |
| | 99.130.214 | | | | | 73,3 | | | | | 157 | | | | 55 | | | 3" x 0,064" |
| | 99.130.220 | | | | | - | | | | | - | | | | - | | | (*) |
| | 99.130.221 | | | | | 60,6 | | | | | 157 | | | | 55 | | | 2 1/2" x 0,064" |
| | 99.130.222 | SAE, 2 | 97 | 60,3 | 93,7 | 46,2 | 4 | 6,7 | 9,8 | 35,0 | 157 | 1,4 | 79,3 | 90,5 | 55 | 20 | SAE Ø35,0x16C | 2" x 0,095" |
| | 99.130.223 | | | | | 71,6 | | | | | 157 | | | | 55 | | | 3" x 0,095" |
| | 99.130.224 | | | | | 73,3 | | | | | 157 | | | | 55 | | | 3" x 0,064" |
| | 99.130.230 | | | | | - | | | | | - | | | | - | | | (*) |
| | 99.130.231 | | | | | 60,6 | | | | | 157 | | | | 55 | | | 2 1/2" x 0,064" |
| | 99.130.232 | SAE, 2 | 97 | 60,3 | 93,7 | 46,2 | 4 | 6,7 | 10,2 | 35,0 | 157 | 1,4 | 79,3 | 90,5 | 55 | 20 | SAE Ø35,0x16C | 2" x 0,095" |
| | 99.130.233 | | | | | 71,6 | | | | | 157 | | | | 55 | | | 3" x 0,095" |
| | 99.130.234 | | | | | 73,3 | | | | | 157 | | | | 55 | | | 3" x 0,064" |
| | 99.130.240 | | | | | - | | | | | - | | | | - | | | (*) |
| | 99.130.241 | | | | | 60,6 | | | | | 157 | | | | 55 | | | 2 1/2" x 0,064" |
| | 99.130.242 | SAE, 2 | 88 | 57,1 | - | 46,2 | 4 | 8,0 | 8,1 | 40,5 | 157 | 1,4 | 69,88 | 90,5 | 55 | 20 | SAE Ø35,0x16C | 2" x 0,095" |
| | 99.130.243 | | | | | 71,6 | | | | | 157 | | | | 55 | | | 3" x 0,095" |
| 1300 | 99.130.244 | | | | | 73,3 | | | | | 157 | | | | 55 | | | 3" x 0,064" |
| | 99.130.020 | | | | | - | | | | | - | | | | - | | | - |
| | 99.130.021 | | | | | 58,6 | | | | | 176 | | | | 57 | | | 2 1/2" x 0,103" |
| | 99.130.022 | DIN, 1 | 90 | 47,0 | - | 73,3 | 4 | 8,0 | 8,1 | 40,5 | 176 | 2,5 | 74,5 | 90,5 | 57 | 20 | SAE Ø38,1x16C | 3" x 0,064" |
| | 99.130.023 | | | | | 45,6 | | | | | 176 | | | | 57 | | | 2" x 0,109" |
| | 99.130.250 | | | | | - | | | | | - | | | | - | | | (*) |
| | 99.130.251 | | | | | 58,6 | | | | | 176 | | | | 57 | | | 2 1/2" x 0,103" |
| | 99.130.252 | SAE, 2 | 92 | 57,1 | - | 73,3 | 4 | 8,0 | 8,1 | 40,5 | 176 | 1,4 | 69,88 | 90,5 | 57 | 20 | SAE Ø38,1x16C | 3" x 0,064" |
| | 99.130.253 | | | | | 45,6 | | | | | 176 | | | | 57 | | | 2" x 0,109" |
| | 99.130.260 | | | | | - | | | | | - | | | | - | | | (*) |
| | 99.130.261 | | | | | 58,6 | | | | | 176 | | | | 57 | | | 2 1/2" x 0,103" |
| | 99.130.262 | SAE, 2 | 92 | 57,1 | - | 73,3 | 4 | 6,7 | 9,8 | 35,0 | 176 | 1,4 | 76,2 | 90,5 | 57 | 20 | SAE Ø38,1x16C | 3" x 0,064" |
| | 99.130.263 | | | | | 45,6 | | | | | 176 | | | | 57 | | | 2" x 0,109" |
| | 99.130.270 | | | | | - | | | | | - | | | | - | | | (*) |
| | 99.130.271 | | | | | 58,6 | | | | | 176 | | | | 57 | | | 2 1/2" x 0,103" |
| | 99.130.272 | SAE, 2 | 97 | 60,3 | 93,7 | 73,3 | 4 | 6,7 | 9,8 | 35,0 | 176 | 1,4 | 79,3 | 90,5 | 57 | 20 | SAE Ø38,1x16C | 3" x 0,064" |
| | 99.130.273 | | | | | 45,6 | | | | | 176 | | | | 57 | | | 2" x 0,109" |
| | 99.130.280 | | | | | - | | | | | - | | | | - | | | (*) |
| | 99.130.281 | | | | | 58,6 | | | | | 176 | | | | 57 | | | 2 1/2" x 0,103" |
| | 99.130.282 | SAE, 2 | 97 | 60,3 | 93,7 | 73,3 | 4 | 6,7 | 10,2 | 35,0 | 176 | 1,4 | 79,3 | 90,5 | 57 | 20 | SAE Ø38,1x16C | 3" x 0,064" |
| | 99.130.283 | | | | | 45,6 | | | | | 176 | | | | 57 | | | 2" x 0,109" |
| | 99.130.290 | | | | | - | | | | | - | | | | - | | | (*) |
| | 99.130.291 | | | | | 58,6 | | | | | 176 | | | | 57 | | | 2 1/2" x 0,103" |
| | 99.130.292 | SAE, 2 | 88 | 57,1 | - | 73,3 | 4 | 8,0 | 8,1 | 40,5 | 176 | 1,4 | 69,88 | 90,5 | 57 | 20 | SAE Ø38,1x16C | 3" x 0,064" |
| | 99.130.293 | | | | | 45,6 | | | | | 176 | | | | 57 | | | 2" x 0,109" |

E= NUMBER OF HOLES / LOCHANZAHL / DELİK SAYISI
ß= JOINT ANGLE / BEUGEWINKEL / MAFSAL AÇISI
O= SPIGIT DEPTH / ZENTRIERBOHRUNGTIEFE / SPİGOT DERİNLİĞİ
(*) WITHOUT SLIP STUB SHAFT / OHNE WELLENZAPFEN / KAYICI MIL HARIC

## SLIP JOINTS / WELLENGELENKE / KAYICI MAFSALLAR



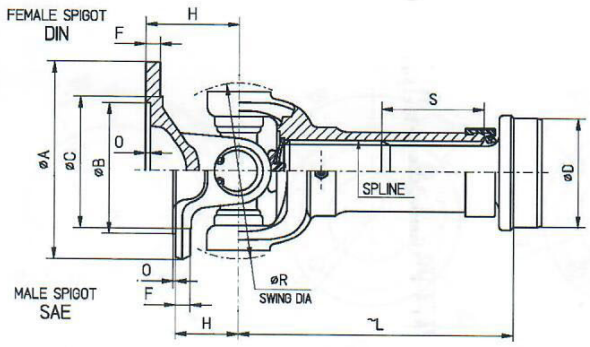


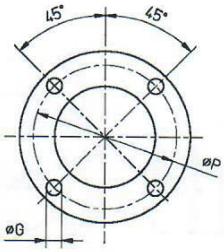


Fig. 1

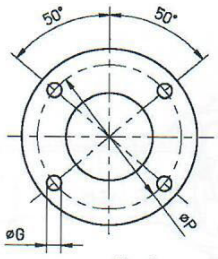


Fig. 2

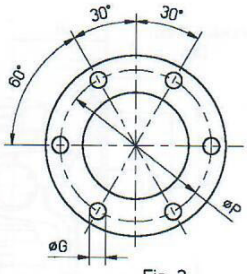


Fig. 3

**KAT-99/131-1** **25/12/2008**

| SERIE BAUGR SERi | JOINT NO GELENK NR MAFSAL NO | FIG. | A | B | C | D | E | F | G | H | L | O | P | R | S | ß° | SPLINE | TUBE O.D.x THICK. ROHRDURCHM.xDICKE BORU ÇAPIxET KAL. |
|---|---|---|---|---|---|---|---|---|---|---|---|---|---|---|---|---|---|---|
| 1310 | 99.131.020 | | | | | - | | | | | - | | | | - | | | (*) |
| | 99.131.021 | | | | | 60,6 | | | | | 155 | | | | 55 | | | 2 1/2" x 0,064" |
| | 99.131.023 | DIN,1 | 90 | 47,0 | 56 | 73,3 | 4 | 6,8 | 8,2 | 50,0 | 156 | 2,5 | 74,5 | 97 | 55 | 20 | SAE Ø35,0x16C | 3" x 0,064" |
| | 99.131.024 | | | | | 71,6 | | | | | 155 | | | | 55 | | | 3" x 0,095" |
| | 99.131.025 | | | | | 46,2 | | | | | 155 | | | | 55 | | | 2" x 0,095" |
| | 99.131.026 | | | | | 46,1 | | | | | 155 | | | | 55 | | | Ø54 x 4 |
| | 99.131.027 | | | | | 46,7 | | | | | 155 | | | | 55 | | | 2" x 0,080" |
| | 99.131.028 | | | | | 72,3 | | | | | 155 | | | | 55 | | | 3" x 0,083" |
| | 99.131.050 | | | | | - | | | | | - | | | | - | | | (*) |
| | 99.131.051 | | | | | 60,6 | | | | | 155 | | | | 55 | | | 2 1/2" x 0,064" |
| | 99.131.053 | DIN,3 | 90 | 47,0 | 56,0 | 73,3 | 6 | 6,8 | 8,2 | 50,0 | 156 | 2,5 | 74,5 | 97 | 55 | 20 | SAE Ø35,0x16C | 3" x 0,064" |
| | 99.131.054 | | | | | 71,6 | | | | | 155 | | | | 55 | | | 3" x 0,095" |
| | 99.131.055 | | | | | 46,2 | | | | | 155 | | | | 55 | | | 2" x 0,095" |
| | 99.131.056 | | | | | 46,1 | | | | | 155 | | | | 55 | | | Ø54 x 4 |
| | 99.131.057 | | | | | 46,7 | | | | | 155 | | | | 55 | | | 2" x 0,080" |
| | 99.131.058 | | | | | 72,3 | | | | | 155 | | | | 55 | | | 3" x 0,083" |
| | 99.131.060 | | | | | - | | | | | - | | | | - | | | (*) |
| | 99.131.061 | | | | | 60,6 | | | | | 155 | | | | 55 | | | 2 1/2" x 0,064" |
| | 99.131.063 | DIN,3 | 90 | 47,0 | 56,0 | 73,3 | 6 | 6,8 | 10,2 | 50,0 | 156 | 2,5 | 74,5 | 97 | 55 | 20 | SAE Ø35,0x16C | 3" x 0,064" |
| | 99.131.064 | | | | | 71,6 | | | | | 155 | | | | 55 | | | 3" x 0,095" |
| | 99.131.065 | | | | | 46,2 | | | | | 155 | | | | 55 | | | 2" x 0,095" |
| | 99.131.066 | | | | | 46,1 | | | | | 155 | | | | 55 | | | Ø54 x 4 |
| | 99.131.067 | | | | | 46,7 | | | | | 155 | | | | 55 | | | 2" x 0,080" |
| | 99.131.068 | | | | | 72,3 | | | | | 155 | | | | 55 | | | 3" x 0,083" |
| | 99.131.070 | | | | | - | | | | | - | | | | - | | | (*) |
| | 99.131.071 | | | | | 60,6 | | | | | 155 | | | | 55 | | | 2 1/2" x 0,064" |
| | 99.131.073 | DIN,1 | 100 | 57,0 | 66 | 73,3 | 4 | 6,8 | 8,2 | 53,0 | 156 | 2,5 | 84,0 | 97 | 55 | 20 | SAE Ø35,0x16C | 3" x 0,064" |
| | 99.131.074 | | | | | 71,6 | | | | | 155 | | | | 55 | | | 3" x 0,095" |
| | 99.131.075 | | | | | 46,2 | | | | | 155 | | | | 55 | | | 2" x 0,095" |
| | 99.131.076 | | | | | 46,1 | | | | | 155 | | | | 55 | | | Ø54 x 4 |
| | 99.131.077 | | | | | 46,7 | | | | | 155 | | | | 55 | | | 2" x 0,080" |
| | 99.131.078 | | | | | 72,3 | | | | | 155 | | | | 55 | | | 3" x 0,083" |
| 1310 | 99.131.080 | | | | | - | | | | | - | | | | - | | | (*) |
| | 99.131.081 | | | | | 60,6 | | | | | 155 | | | | 55 | | | 2 1/2" x 0,064" |
| | 99.131.083 | DIN,3 | 100 | 57,0 | 66 | 73,3 | 6 | 6,8 | 8,2 | 53,0 | 156 | 2,5 | 84,0 | 97 | 55 | 20 | SAE Ø35,0x16C | 3" x 0,064" |
| | 99.131.084 | | | | | 71,6 | | | | | 155 | | | | 55 | | | 3" x 0,095" |
| | 99.131.085 | | | | | 46,2 | | | | | 155 | | | | 55 | | | 2" x 0,095" |
| | 99.131.086 | | | | | 46,1 | | | | | 155 | | | | 55 | | | Ø54 x 4 |
| | 99.131.087 | | | | | 46,7 | | | | | 155 | | | | 55 | | | 2" x 0,080" |
| | 99.131.088 | | | | | 72,3 | | | | | 155 | | | | 55 | | | 3" x 0,083" |
| 1310 | 99.131.120 | | | | | - | | | | | - | | | | - | | | (*) |
| | 99.131.121 | | | | | 60,6 | | | | | 155 | | | | 55 | | | 2 1/2" x 0,064" |
| | 99.131.123 | SAE,2 | 92 | 57,1 | - | 73,3 | 4 | 6,8 | 9,8 | 34,9 | 156 | 1,4 | 76,2 | 97 | 55 | 20 | SAE Ø35,0x16C | 3" x 0,064" |
| | 99.131.124 | | | | | 71,6 | | | | | 155 | | | | 55 | | | 3" x 0,095" |
| | 99.131.125 | | | | | 46,2 | | | | | 155 | | | | 55 | | | 2" x 0,095" |
| | 99.131.126 | | | | | 46,1 | | | | | 155 | | | | 55 | | | Ø54 x 4 |
| | 99.131.127 | | | | | 46,7 | | | | | 155 | | | | 55 | | | 2" x 0,080" |
| | 99.131.128 | | | | | 72,3 | | | | | 155 | | | | 55 | | | 3" x 0,083" |

E= NUMBER OF HOLES / LOCHANZAHL / DELİK SAYISI
ß= JOINT ANGLE / BEUGEWINKEL / MAFSAL AÇISI
O= SPIGIT DEPTH / ZENTRIERBOHRUNGTIEFE / SPİGOT DERİNLİĞİ
(*) WITHOUT SLIP STUB SHAFT / OHNE WELLENZAPFEN / KAYICI MIL HARIC

# SLIP JOINTS / WELLENGELENKE / KAYICI MAFSALLAR

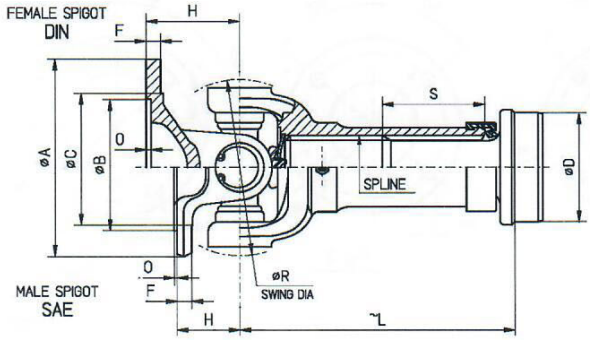


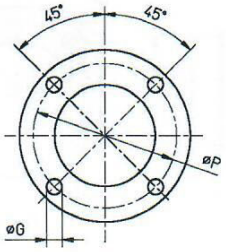


Fig. 1

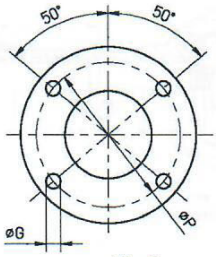


Fig. 2

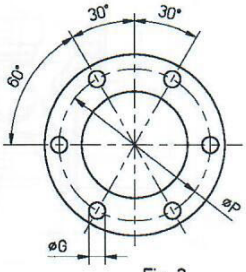


Fig. 3

**KAT-99/131-2** **25/12/2008**

| SERIE BAUGR SERi | JOINT NO GELENK NR MAFSAL NO | FIG. | A | B | C | D | E | F | G | H | L | O | P | R | S | ß° | SPLINE | TUBE O.D.x THICK. ROHRDURCHM.xDICKE BORU ÇAPIxET KAL. |
|---|---|---|---|---|---|---|---|---|---|---|---|---|---|---|---|---|---|---|
| | 99.131.100 | | | | | - | | | | | - | | | | - | | | (*) |
| | 99.131.101 | | | | | 60,6 | | | | | 155 | | | | 55 | | | 2 1/2" x 0,064" |
| | 99.131.103 | SAE,2 | 97 | 60,3 | - | 73,3 | 4 | 6,8 | 9,8 | 34,9 | 156 | 1,4 | 79,4 | 97 | 55 | 20 | SAE Ø35,0x16C | 3" x 0,064" |
| | 99.131.104 | | | | | 71,6 | | | | | 155 | | | | 55 | | | 3" x 0,095" |
| | 99.131.105 | | | | | 46,2 | | | | | 155 | | | | 55 | | | 2" x 0,095" |
| | 99.131.106 | | | | | 46,1 | | | | | 155 | | | | 55 | | | Ø54 x 4 |
| | 99.131.107 | | | | | 46,7 | | | | | 155 | | | | 55 | | | 2" x 0,080" |
| | 99.131.108 | | | | | 72,3 | | | | | 155 | | | | 55 | | | 3" x 0,083" |
| | 99.131.130 | | | | | - | | | | | - | | | | - | | | (*) |
| | 99.131.131 | | | | | 60,6 | | | | | 155 | | | | 55 | | | 2 1/2" x 0,064" |
| | 99.131.133 | SAE,2 | 97 | 60,3 | - | 73,3 | 4 | 6,8 | 10,2 | 34,9 | 156 | 1,4 | 79,4 | 97 | 55 | 20 | SAE Ø35,0x16C | 3" x 0,064" |
| | 99.131.134 | | | | | 71,6 | | | | | 155 | | | | 55 | | | 3" x 0,095" |
| | 99.131.135 | | | | | 46,2 | | | | | 155 | | | | 55 | | | 2" x 0,095" |
| | 99.131.136 | | | | | 46,1 | | | | | 155 | | | | 55 | | | Ø54 x 4 |
| | 99.131.137 | | | | | 46,7 | | | | | 155 | | | | 55 | | | 2" x 0,080" |
| | 99.131.138 | | | | | 72,3 | | | | | 155 | | | | 55 | | | 3" x 0,083" |
| | 99.131.140 | | | | | - | | | | | - | | | | - | | | (*) |
| 1310 | 99.131.141 | | | | | 60,6 | | | | | 155 | | | | 55 | | | 2 1/2" x 0,064" |
| | 99.131.143 | SAE,1 | 114 | 69,8 | - | 73,3 | 4 | 8,2 | 11,3 | 34,9 | 156 | 1,4 | 95,3 | 97 | 55 | 20 | SAE Ø35,0x16C | 3" x 0,064" |
| | 99.131.144 | | | | | 71,6 | | | | | 155 | | | | 55 | | | 3" x 0,095" |
| | 99.131.145 | | | | | 46,2 | | | | | 155 | | | | 55 | | | 2" x 0,095" |
| | 99.131.146 | | | | | 46,1 | | | | | 155 | | | | 55 | | | Ø54 x 4 |
| | 99.131.147 | | | | | 46,7 | | | | | 155 | | | | 55 | | | 2" x 0,080" |
| | 99.131.148 | | | | | 72,3 | | | | | 155 | | | | 55 | | | 3" x 0,083" |
| | 99.131.150 | | | | | - | | | | | - | | | | - | | | (*) |
| | 99.131.151 | | | | | 60,6 | | | | | 155 | | | | 55 | | | 2 1/2" x 0,064" |
| | 99.131.153 | SAE,2 | 114 | 69,8 | - | 73,3 | 4 | 8,2 | 12,2 | 34,9 | 156 | 1,4 | 95,3 | 97 | 55 | 20 | SAE Ø35,0x16C | 3" x 0,064" |
| | 99.131.154 | | | | | 71,6 | | | | | 155 | | | | 55 | | | 3" x 0,095" |
| | 99.131.155 | | | | | 46,2 | | | | | 155 | | | | 55 | | | 2" x 0,095" |
| | 99.131.156 | | | | | 46,1 | | | | | 155 | | | | 55 | | | Ø54 x 4 |
| | 99.131.157 | | | | | 46,7 | | | | | 155 | | | | 55 | | | 2" x 0,080" |
| | 99.131.158 | | | | | 72,3 | | | | | 155 | | | | 55 | | | 3" x 0,083" |
| | 99.131.200 | | | | | - | | | | | - | | | | - | | | (*) |
| | 99.131.201 | | | | | 60,6 | | | | | 182 | | | | 70 | | | 2 1/2" x 0,064" |
| | 99.131.203 | DIN,1 | 90 | 47,0 | 56 | 73,3 | 4 | 6,8 | 8,2 | 50,0 | 182 | 2,5 | 74,5 | 97 | 70 | 30 | SAE Ø35,0x16C | 3" x 0,064" |
| | 99.131.204 | | | | | 71,6 | | | | | 182 | | | | 70 | | | 3" x 0,095" |
| | 99.131.205 | | | | | 46,2 | | | | | 182 | | | | 70 | | | 2" x 0,095" |
| | 99.131.206 | | | | | 66,9 | | | | | 182 | | | | 70 | | | 2 3/4" x 0,064" |
| | 99.131.210 | | | | | - | | | | | - | | | | - | | | (*) |
| | 99.131.211 | | | | | 60,6 | | | | | 182 | | | | 70 | | | 2 1/2" x 0,064" |
| | 99.131.213 | DIN,3 | 90 | 47,0 | 56,0 | 73,3 | 6 | 6,8 | 8,2 | 50,0 | 182 | 2,5 | 74,5 | 97 | 70 | 30 | SAE Ø35,0x16C | 3" x 0,064" |
| | 99.131.214 | | | | | 71,6 | | | | | 182 | | | | 70 | | | 3" x 0,095" |
| | 99.131.215 | | | | | 46,2 | | | | | 182 | | | | 70 | | | 2" x 0,095" |
| | 99.131.216 | | | | | 66,9 | | | | | 182 | | | | 70 | | | 2 3/4" x 0,064" |

E= NUMBER OF HOLES / LOCHANZAHL / DELİK SAYISI
ß= JOINT ANGLE / BEUGEWINKEL / MAFSAL AÇISI
O= SPIGIT DEPTH / ZENTRIERBOHRUNGTIEFE / SPİGOT DERİNLİĞİ
(*) WITHOUT SLIP STUB SHAFT / OHNE WELLENZAPFEN / KAYICI MIL HARIC

## SLIP JOINTS / WELLENGELENKE / KAYICI MAFSALLAR



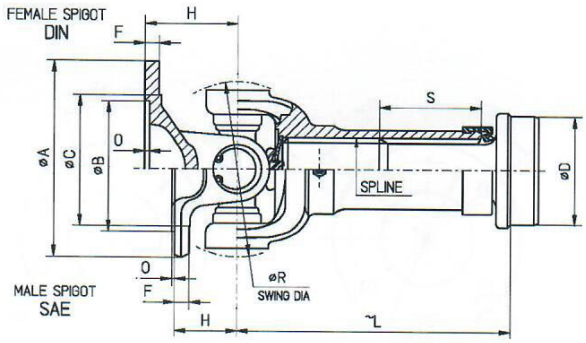


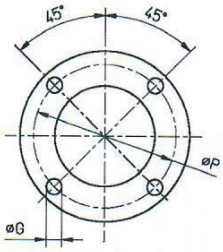


Fig. 1

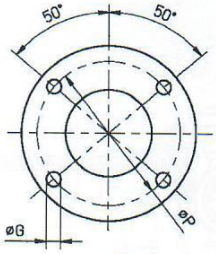


Fig. 2

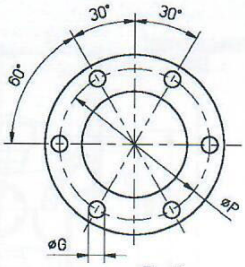


Fig. 3

KAT-99/131-3

25/12/2008

| SERIE BAUGR SERi | JOINT NO GELENK NR MAFSAL NO | FIG. | A | B | C | D | E | F | G | H | L | O | P | R | S | ß° | SPLINE | TUBE O.D.x THICK. ROHRDURCHM.xDICKE BORU ÇAPIxET KAL. |
|---|---|---|---|---|---|---|---|---|---|---|---|---|---|---|---|---|---|---|
| | 99.131.220 | | | | | - | | | | | - | | | | - | | | (*) |
| | 99.131.221 | | | | | 60,6 | | | | | 182 | | | | 70 | | | 2 1/2" x 0,064" |
| | 99.131.223 | DIN,3 | 90 | 47,0 | 56,0 | 73,3 | 6 | 6,8 | 10,2 | 50,0 | 182 | 2,5 | 74,5 | 97 | 70 | 30 | SAE Ø35,0x16C | 3" x 0,064" |
| | 99.131.224 | | | | | 71,6 | | | | | 182 | | | | 70 | | | 3" x 0,095" |
| | 99.131.225 | | | | | 46,2 | | | | | 182 | | | | 70 | | | 2" x 0,095" |
| | 99.131.226 | | | | | 66,9 | | | | | 182 | | | | 70 | | | 2 3/4" x 0,064" |
| | 99.131.230 | | | | | - | | | | | - | | | | - | | | (*) |
| | 99.131.231 | | | | | 60,6 | | | | | 182 | | | | 70 | | | 2 1/2" x 0,064" |
| | 99.131.233 | DIN,1 | 100 | 57,0 | 66 | 73,3 | 4 | 6,8 | 8,2 | 53,0 | 182 | 2,5 | 84,0 | 97 | 70 | 30 | SAE Ø35,0x16C | 3" x 0,064" |
| | 99.131.234 | | | | | 71,6 | | | | | 182 | | | | 70 | | | 3" x 0,095" |
| | 99.131.235 | | | | | 46,2 | | | | | 182 | | | | 70 | | | 2" x 0,095" |
| | 99.131.236 | | | | | 66,9 | | | | | 182 | | | | 70 | | | 2 3/4" x 0,064" |
| | 99.131.240 | | | | | - | | | | | - | | | | - | | | (*) |
| | 99.131.241 | | | | | 60,6 | | | | | 182 | | | | 70 | | | 2 1/2" x 0,064" |
| | 99.131.243 | DIN,3 | 100 | 57,0 | 66 | 73,3 | 6 | 6,8 | 8,2 | 53,0 | 182 | 2,5 | 84,0 | 97 | 70 | 30 | SAE Ø35,0x16C | 3" x 0,064" |
| | 99.131.244 | | | | | 71,6 | | | | | 182 | | | | 70 | | | 3" x 0,095" |
| | 99.131.245 | | | | | 46,2 | | | | | 182 | | | | 70 | | | 2" x 0,095" |
| | 99.131.246 | | | | | 66,9 | | | | | 182 | | | | 70 | | | 2 3/4" x 0,064" |
| | 99.131.300 | | | | | - | | | | | - | | | | - | | | (*) |
| | 99.131.301 | | | | | 60,6 | | | | | 182 | | | | 70 | | | 2 1/2" x 0,064" |
| | 99.131.303 | SAE,2 | 92 | 57,1 | - | 73,3 | 4 | 6,8 | 9,8 | 34,9 | 182 | 1,4 | 76,2 | 97 | 70 | 20 | SAE Ø35,0x16C | 3" x 0,064" |
| | 99.131.304 | | | | | 71,6 | | | | | 182 | | | | 70 | | | 3" x 0,095" |
| | 99.131.305 | | | | | 46,2 | | | | | 182 | | | | 70 | | | 2" x 0,095" |
| 1310 | 99.131.306 | | | | | 66,9 | | | | | 182 | | | | 70 | | | 2 3/4" x 0,064" |
| | 99.131.310 | | | | | - | | | | | - | | | | - | | | (*) |
| | 99.131.311 | | | | | 60,6 | | | | | 182 | | | | 70 | | | 2 1/2" x 0,064" |
| | 99.131.313 | SAE,2 | 97 | 60,3 | - | 73,3 | 4 | 6,6 | 9,8 | 41,4 | 182 | 1,4 | 79,3 | 97 | 70 | 30 | SAE Ø35,0x16C | 3" x 0,064" |
| | 99.131.314 | | | | | 71,6 | | | | | 182 | | | | 70 | | | 3" x 0,095" |
| | 99.131.315 | | | | | 46,2 | | | | | 182 | | | | 70 | | | 2" x 0,095" |
| | 99.131.316 | | | | | 66,9 | | | | | 182 | | | | 70 | | | 2 3/4" x 0,064" |
| | 99.131.320 | | | | | - | | | | | - | | | | - | | | (*) |
| | 99.131.321 | | | | | 60,6 | | | | | 182 | | | | 70 | | | 2 1/2" x 0,064" |
| | 99.131.323 | SAE,2 | 97 | 60,3 | - | 73,3 | 4 | 6,8 | 9,8 | 34,9 | 182 | 1,4 | 79,4 | 97 | 70 | 20 | SAE Ø35,0x16C | 3" x 0,064" |
| | 99.131.324 | | | | | 71,6 | | | | | 182 | | | | 70 | | | 3" x 0,095" |
| | 99.131.325 | | | | | 46,2 | | | | | 182 | | | | 70 | | | 2" x 0,095" |
| | 99.131.326 | | | | | 66,9 | | | | | 182 | | | | 70 | | | 2 3/4" x 0,064" |
| | 99.131.330 | | | | | - | | | | | - | | | | - | | | (*) |
| | 99.131.331 | | | | | 60,6 | | | | | 182 | | | | 70 | | | 2 1/2" x 0,064" |
| | 99.131.333 | SAE,2 | 97 | 60,3 | - | 73,3 | 4 | 6,8 | 10,2 | 34,9 | 182 | 1,4 | 79,3 | 97 | 70 | 20 | SAE Ø35,0x16C | 3" x 0,064" |
| | 99.131.334 | | | | | 71,6 | | | | | 182 | | | | 70 | | | 3" x 0,095" |
| | 99.131.335 | | | | | 46,2 | | | | | 182 | | | | 70 | | | 2" x 0,095" |
| | 99.131.336 | | | | | 66,9 | | | | | 182 | | | | 70 | | | 2 3/4" x 0,064" |
| | 99.131.340 | | | | | - | | | | | - | | | | - | | | (*) |
| | 99.131.341 | | | | | 60,6 | | | | | 182 | | | | 70 | | | 2 1/2" x 0,064" |
| | 99.131.343 | SAE,2 | 97 | 60,3 | - | 73,3 | 4 | 7,0 | 10,2 | 41,4 | 182 | 1,4 | 95,5 | 97 | 70 | 30 | SAE Ø35,0x16C | 3" x 0,064" |
| | 99.131.344 | | | | | 71,6 | | | | | 182 | | | | 70 | | | 3" x 0,095" |
| | 99.131.345 | | | | | 46,2 | | | | | 182 | | | | 70 | | | 2" x 0,095" |
| | 99.131.346 | | | | | 66,9 | | | | | 182 | | | | 70 | | | 2 3/4" x 0,064" |

E= NUMBER OF HOLES / LOCHANZAHL / DELİK SAYISI
ß= JOINT ANGLE / BEUGEWINKEL / MAFSAL AÇISI
O= SPIGIT DEPTH / ZENTRIERBOHRUNGTIEFE / SPİGOT DERİNLİĞİ
(*) WITHOUT SLIP STUB SHAFT / OHNE WELLENZAPFEN / KAYICI MIL HARIC

# UZMANKARDAN



## SLIP JOINTS / WELLENGELENKE / KAYICI MAFSALLAR

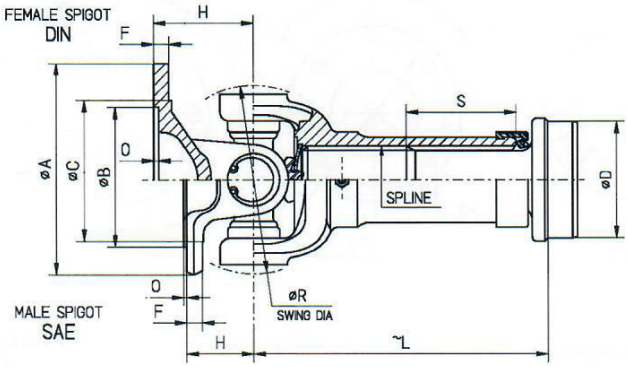


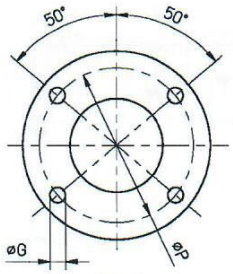


Fig. 1

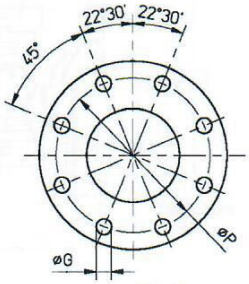


Fig. 2

**KAT-99/131-4** **25/12/2008**

| SERIE BAUGR SERI | JOINT NO GELENK NR MAFSAL NO | FIG | A | B | C | D | E | F | G | H | L | O | P | R | S | ß° | SPLINE | TUBE O.D.x THICK. ROHRDURCHM.xDICKE BORU ÇAPIxET KAL. |
|---|---|---|---|---|---|---|---|---|---|---|---|---|---|---|---|---|---|---|
| 1310 | 99.131.350 | | | | | - | | | | | - | | | | - | | | (*) |
| | 99.131.351 | | | | | 60,6 | | | | | 182 | | | | 70 | | | 2 1/2" x 0,064" |
| | 99.131.353 | SAE,1 | 114 | 69,8 | - | 73,3 | 4 | 8,2 | 11,2 | 34,9 | 182 | 1,4 | 95,3 | 97 | 70 | 20 | SAE Ø35,0x16C | 3" x 0,064" |
| | 99.131.354 | | | | | 71,6 | | | | | 182 | | | | 70 | | | 3" x 0,095" |
| | 99.131.355 | | | | | 46,2 | | | | | 182 | | | | 70 | | | 2" x 0,095" |
| | 99.131.356 | | | | | 66,9 | | | | | 182 | | | | 70 | | | 2 3/4" x 0,064" |
| | 99.131.360 | | | | | - | | | | | - | | | | - | | | (*) |
| | 99.131.361 | | | | | 60,6 | | | | | 182 | | | | 70 | | | 2 1/2" x 0,064" |
| | 99.131.363 | SAE,2 | 114 | 69,8 | - | 73,3 | 4 | 8,2 | 12,2 | 34,9 | 182 | 1,4 | 95,3 | 97 | 70 | 20 | SAE Ø35,0x16C | 3" x 0,064" |
| | 99.131.364 | | | | | 71,6 | | | | | 182 | | | | 70 | | | 3" x 0,095" |
| | 99.131.365 | | | | | 46,2 | | | | | 182 | | | | 70 | | | 2" x 0,095" |
| | 99.131.366 | | | | | 66,9 | | | | | 182 | | | | 70 | | | 2 3/4" x 0,064" |
| | 99.131.160 | | | | | - | | | | | - | | | | - | | | (*) |
| | 99.131.161 | | | | | 60,6 | | | | | 155 | | | | 55 | | | 2 1/2" x 0,064" |
| | 99.131.163 | DIN,2 | 120 | 75,0 | 82,0 | 73,3 | 8 | 8,0 | 10,2 | 52,0 | 155 | 2,5 | 101,5 | 97 | 55 | 20 | SAE Ø35,0x16C | 3" x 0,064" |
| | 99.131.164 | | | | | 71,6 | | | | | 155 | | | | 55 | | | 3" x 0,095" |
| | 99.131.165 | | | | | 46,2 | | | | | 156 | | | | 55 | | | 2" x 0,095" |
| | 99.131.166 | | | | | 46,1 | | | | | 155 | | | | 55 | | | Ø54 x 4 |
| | 99.131.167 | | | | | 46,7 | | | | | 155 | | | | 55 | | | 2" x 0,080" |
| | 99.131.168 | | | | | 72,3 | | | | | 155 | | | | 55 | | | 3" x 0,083" |
| | 99.131.170 | | | | | - | | | | | - | | | | - | | | (*) |
| | 99.131.171 | | | | | 60,6 | | | | | 155 | | | | 55 | | | 2 1/2" x 0,064" |
| | 99.131.173 | DIN,2 | 120 | 75,0 | 82 | 73,3 | 8 | 8,0 | 8,2 | 52,0 | 156 | 2,5 | 101,5 | 97 | 55 | 20 | SAE Ø35,0x16C | 3" x 0,064" |
| | 99.131.174 | | | | | 71,6 | | | | | 155 | | | | 55 | | | 3" x 0,095" |
| | 99.131.175 | | | | | 46,2 | | | | | 155 | | | | 55 | | | 2" x 0,095" |
| | 99.131.176 | | | | | 46,1 | | | | | 155 | | | | 55 | | | Ø54 x 4 |
| | 99.131.177 | | | | | 46,7 | | | | | 155 | | | | 55 | | | 2" x 0,080" |
| | 99.131.178 | | | | | 72,3 | | | | | 155 | | | | 55 | | | 3" x 0,083" |
| | 99.131.250 | | | | | - | | | | | - | | | | - | | | (*) |
| | 99.131.251 | | | | | 60,6 | | | | | 182 | | | | 70 | | | 2 1/2" x 0,064" |
| | 99.131.253 | DIN,2 | 120 | 75,0 | 82,0 | 73,3 | 8 | 8,0 | 10,2 | 52,0 | 182 | 2,5 | 101,5 | 97 | 70 | 30 | SAE Ø35,0x16C | 3" x 0,064" |
| | 99.131.254 | | | | | 71,6 | | | | | 182 | | | | 70 | | | 3" x 0,095" |
| | 99.131.255 | | | | | 46,2 | | | | | 182 | | | | 70 | | | 2" x 0,095" |
| | 99.131.256 | | | | | 66,9 | | | | | 182 | | | | 70 | | | 2 3/4" x 0,064" |
| | 99.131.260 | | | | | - | | | | | - | | | | - | | | (*) |
| | 99.131.261 | | | | | 60,6 | | | | | 182 | | | | 70 | | | 2 1/2" x 0,064" |
| | 99.131.263 | DIN,2 | 120 | 75,0 | 82 | 73,3 | 8 | 8,0 | 8,2 | 52,0 | 182 | 2,5 | 101,5 | 97 | 70 | 30 | SAE Ø35,0x16C | 3" x 0,064" |
| | 99.131.264 | | | | | 71,6 | | | | | 182 | | | | 70 | | | 3" x 0,095" |
| | 99.131.265 | | | | | 46,2 | | | | | 182 | | | | 70 | | | 2" x 0,095" |
| | 99.131.266 | | | | | 66,9 | | | | | 182 | | | | 70 | | | 2 3/4" x 0,064" |

E= NUMBER OF HOLES / LOCHANZAHL / DELİK SAYISI
ß= JOINT ANGLE / BEUGEWINKEL / MAFSAL AÇISI
O= SPIGIT DEPTH / ZENTRIERBOHRUNGTIEFE / SPİGOT DERİNLİĞİ
(*) WITHOUT SLIP STUB SHAFT / OHNE WELLENZAPFEN / KAYICI MIL HARIC

## SLIP JOINTS / WELLENGELENKE / KAYICI MAFSALLAR



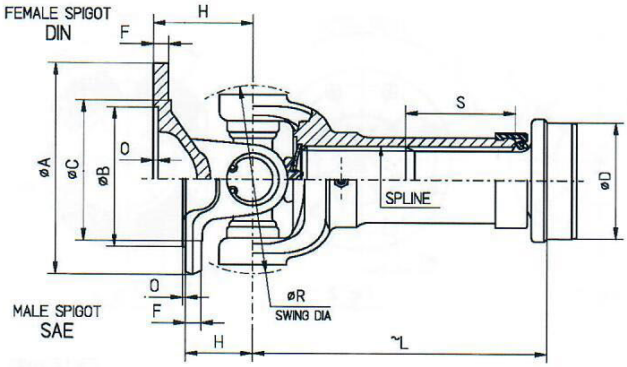


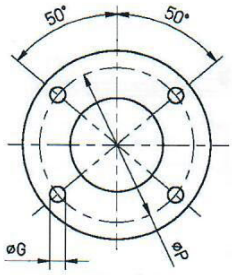


Fig. 1

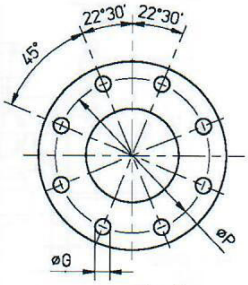


Fig. 2

**KAT-99/141** **25/12/2008**

| SERIE BAUGR SERI | JOINT NO GELENK NR MAFSAL NO | FIG | A | B | C | D | E | F | G | H | L | O | P | R | S | ß° | SPLINE |
|---|---|---|---|---|---|---|---|---|---|---|---|---|---|---|---|---|---|
| 1410 | 99.141.010 | | | | | - | | | | | - | | | | - | | SAE 1 1/2"x16C |
| | 99.141.015 | | | | | 45,6 | | | | | 184 | | | | 55 | | SAE 1 1/2"x16C |
| | 99.141.016 | DIN,2 | 120 | 75,0 | 81 | 73,3 | 8 | 8,0 | 10,2 | 56,0 | 184 | 2,8 | 101,5 | 122 | 55 | 20 | SAE 1 1/2"x16C |
| | 99.141.013 | | | | | 71,6 | | | | | 186 | | | | 70 | | SAE 1 1/2"x16C |
| | 99.141.014 | | | | | 84,4 | | | | | 186 | | | | 70 | | SAE 1 1/2"X16C |
| | 99.141.017 | | | | | 58,6 | | | | | 184 | | | | 55 | | SAE 1 1/2"X16C |
| | 99.141.020 | | | | | - | | | | | - | | | | - | | SAE 1 1/2"x16C |
| | 99.141.025 | | | | | 45,6 | | | | | 184 | | | | 55 | | SAE 1 1/2"x16C |
| | 99.141.026 | DIN,2 | 120 | 75,0 | 81 | 73,3 | 8 | 8,0 | 8,1 | 56,0 | 184 | 2,8 | 101,5 | 122 | 55 | 20 | SAE 1 1/2"x16C |
| | 99.141.023 | | | | | 71,6 | | | | | 186 | | | | 70 | | SAE 1 1/2"x16C |
| | 99.141.024 | | | | | 84,4 | | | | | 186 | | | | 70 | | SAE 1 1/2"X16C |
| | 99.141.027 | | | | | 58,6 | | | | | 184 | | | | 55 | | SAE 1 1/2"X16C |
| | 99.141.030 | | | | | - | | | | | - | | | | - | | SAE 1 1/2"x16C |
| | 99.141.031 | DIN,2 | 120 | 75,0 | 81 | 71,6 | 8 | 8,0 | 10,2 | 56,0 | 221 | 2,8 | 101,5 | 122 | 80 | 20 | SAE 1 1/2"x16C |
| | 99.141.040 | | | | | - | | | | | - | | | | - | | SAE 1 1/2"x16C |
| | 99.141.041 | DIN,2 | 120 | 75,0 | 81 | 71,6 | 8 | 8,0 | 8,1 | 56,0 | 221 | 2,8 | 101,5 | 122 | 80 | 20 | SAE 1 1/2"x16C |
| | 99.141.100 | | | | | - | | | | | - | | | | - | | SAE 1 1/2"x16C |
| | 99.141.105 | | | | | 45,6 | | | | | 184 | | | | 55 | | SAE 1 1/2"x16C |
| | 99.141.106 | SAE,1 | 114 | 69,8 | - | 73,3 | 4 | 7,5 | 11,3 | 43,0 | 184 | 1,2 | 95,3 | 122 | 55 | 20 | SAE 1 1/2"x16C |
| | 99.141.103 | | | | | 71,6 | | | | | 186 | | | | 70 | | SAE 1 1/2"x16C |
| | 99.141.104 | | | | | 84,4 | | | | | 186 | | | | 70 | | SAE 1 1/2"X16C |
| | 99.141.107 | | | | | 58,6 | | | | | 184 | | | | 55 | | SAE 1 1/2"X16C |
| | 99.141.120 | | | | | - | | | | | - | | | | - | | SAE 1 1/2"x16C |
| | 99.141.121 | | | | | 45,6 | | | | | 184 | | | | 55 | | SAE 1 1/2"x16C |
| | 99.141.122 | SAE,1 | 114 | 69,8 | - | 73,3 | 4 | 7,5 | 12,2 | 42,9 | 184 | 1,4 | 95,3 | 122 | 55 | 20 | SAE 1 1/2"x16C |
| | 99.141.123 | | | | | 71,6 | | | | | 186 | | | | 70 | | SAE 1 1/2"x16C |
| | 99.141.124 | | | | | 84,4 | | | | | 186 | | | | 70 | | SAE 1 1/2"X16C |
| | 99.141.125 | | | | | 58,6 | | | | | 184 | | | | 55 | | SAE 1 1/2"X16C |
| | 99.141.130 | | | | | - | | | | | - | | | | - | | SAE 1 1/2"x16C |
| | 99.141.131 | | | | | 45,6 | | | | | 184 | | | | 55 | | SAE 1 1/2"x16C |
| | 99.141.132 | SAE,1 | 146 | 95,2 | - | 73,3 | 4 | 11,5 | 13,0 | 50,8 | 184 | 1,4 | 120,7 | 122 | 55 | 20 | SAE 1 1/2"x16C |
| | 99.141.133 | | | | | 71,6 | | | | | 186 | | | | 70 | | SAE 1 1/2"x16C |
| | 99.141.134 | | | | | 84,4 | | | | | 186 | | | | 70 | | SAE 1 1/2"X16C |
| | 99.141.135 | | | | | 58,6 | | | | | 184 | | | | 55 | | SAE 1 1/2"X16C |
| | 99.141.140 | | | | | - | | | | | - | | | | - | | SAE 1 1/2"x16C |
| | 99.141.141 | | | | | 45,6 | | | | | 184 | | | | 55 | | SAE 1 1/2"x16C |
| | 99.141.142 | SAE,1 | 146 | 95,2 | - | 73,3 | 4 | 11,5 | 14,2 | 50,8 | 184 | 1,4 | 120,7 | 122 | 55 | 20 | SAE 1 1/2"x16C |
| | 99.141.143 | | | | | 71,6 | | | | | 186 | | | | 70 | | SAE 1 1/2"x16C |
| | 99.141.144 | | | | | 84,4 | | | | | 186 | | | | 70 | | SAE 1 1/2"X16C |
| | 99.141.145 | | | | | 58,6 | | | | | 184 | | | | 55 | | SAE 1 1/2"X16C |
| | 99.141.110 | | | | | - | | | | | - | | | | | | SAE 1 1/2"x16C |
| | 99.141.111 | SAE,1 | 146 | 95,2 | - | 71,6 | 4 | 11,5 | 13,0 | 50,8 | 221 | 1,3 | 120,6 | 122 | 80 | 30 | SAE 1 1/2"x16C |
| | 99.141.112 | | | | | - | | | | | - | | | | | | SAE 1 1/2"x16C |
| | 99.141.113 | SAE,1 | 114 | 69,8 | - | 71,6 | 4 | 7,5 | 12,2 | 42,9 | 221 | 1,4 | 95,3 | 122 | 80 | 30 | SAE 1 1/2"x16C |
| | 99.141.114 | | | | | - | | | | | - | | | | | | SAE 1 1/2"x16C |
| | 99.141.115 | SAE,1 | 146 | 95,2 | - | 71,6 | 4 | 11,5 | 14,2 | 50,8 | 221 | 1,4 | 120,7 | 122 | 80 | 30 | SAE 1 1/2"x16C |

E= NUMBER OF HOLES / LOCHANZAHL / DELİK SAYISI
ß= JOINT ANGLE / BEUGEWINKEL / MAFSAL AÇISI
O= SPIGIT DEPTH / ZENTRIERBOHRUNGTIEFE / SPİGOT DERİNLİĞİ
(*) WITHOUT SLIP STUB SHAFT / OHNE WELLENZAPFEN / KAYICI MIL HARIC

## SLIP JOINTS / WELLENGELENKE / KAYICI MAFSALLAR

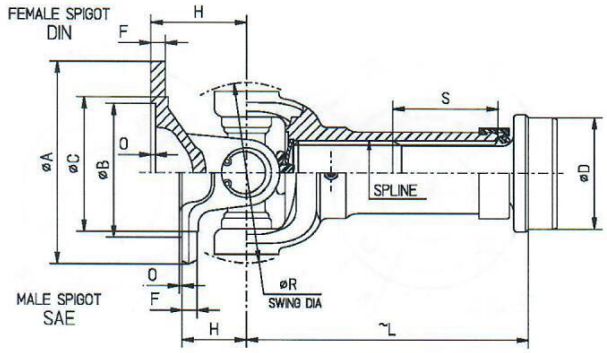


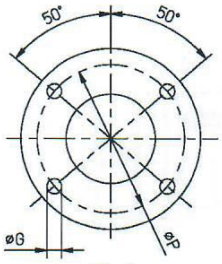


Fig. 1

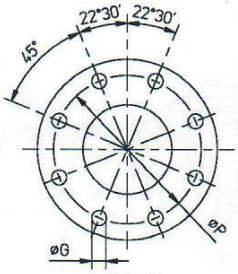


Fig. 2

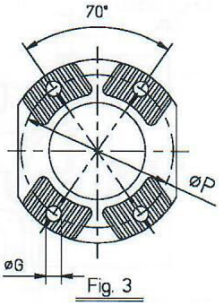


Fig. 3

**KAT-99/2** **25/12/2008**

| SERIE BAUGR SERI | JOINT NO GELENK NR MAFSAL NO | FIG | A | B | C | D | E | F | G | H | L | O | P | R | S | ß° | SPLINE | TUBE O.D.x THICK. ROHRDURCHM.xDICKE BORU ÇAPIxET KAL. |
|---|---|---|---|---|---|---|---|---|---|---|---|---|---|---|---|---|---|---|
| 1480 | 99.148.010 | DIN,2 | 120 | 75,0 | 81 | - | 8 | 8,0 | 8,2 | 65,0 | - | 2,5 | 101,5 | 122 | - | 24° | SAE 1 3/4"x16C | (*) |
| | 99.148.011 | | | | | 84,3 | | | | | 196 | | | | 70 | | SAE 1 3/4"x16C | 3 1/2 " x 0,095" |
| | 99.148.012 | | | | | 71,6 | | | | | 196 | | | | 70 | | SAE 1 3/4"x16C | 3" x 0,095" |
| | 99.148.020 | DIN,2 | 120 | 75,0 | 81 | - | 8 | 9,0 | 10,2 | 65,0 | - | 2,5 | 101,5 | 122 | - | 24° | SAE 1 3/4"x16C | (*) |
| | 99.148.021 | | | | | 84,3 | | | | | 196 | | | | 70 | | SAE 1 3/4"x16C | 3 1/2 " x 0,095" |
| | 99.148.022 | | | | | 71,6 | | | | | 196 | | | | 70 | | SAE 1 3/4"x16C | 3" x 0,095" |
| | 99.148.110 | SAE,1 | 116 | 69,8 | - | - | 4 | 9,0 | 12,2 | 65,0 | - | 1,4 | 95,3 | 122 | - | 24° | SAE 1 3/4"x16C | (*) |
| | 99.148.111 | | | | | 84,3 | | | | | 196 | | | | 70 | | SAE 1 3/4"x16C | 3 1/2 " x 0,095" |
| | 99.148.112 | | | | | 71,6 | | | | | 196 | | | | 70 | | SAE 1 3/4"x16C | 3" x 0,095" |
| | 99.148.120 | SAE,1 | 146 | 95,2 | - | - | 4 | 9,0 | 12,9 | 50,8 | - | 1,4 | 120,7 | 122 | - | 24° | SAE 1 3/4"x16C | (*) |
| | 99.148.121 | | | | | 84,3 | | | | | 196 | | | | 70 | | SAE 1 3/4"x16C | 3 1/2 " x 0,095" |
| | 99.148.122 | | | | | 71,6 | | | | | 196 | | | | 70 | | SAE 1 3/4"x16C | 3" x 0,095" |
| | 99.148.130 | SAE,1 | 146 | 95,2 | - | - | 4 | 9,0 | 14,3 | 50,8 | - | 1,4 | 120,7 | 122 | - | 24° | SAE 1 3/4"x16C | (*) |
| | 99.148.131 | | | | | 84,3 | | | | | 196 | | | | 70 | | SAE 1 3/4"x16C | 3 1/2 " x 0,095" |
| | 99.148.132 | | | | | 71,6 | | | | | 196 | | | | 70 | | SAE 1 3/4"x16C | 3" x 0,095" |
| | 99.148.200 | XS,3 | 120 | - | - | - | 4 | 15,5 | 11,1 | 63,5 | - | - | 100,0 | 129 | - | 24° | SAE 1 3/4"x16C | (*) |
| | 99.148.201 | | | | | 84,3 | | | | | 196 | | | | 70 | | SAE 1 3/4"x16C | 3 1/2 " x 0,095" |
| | 99.148.202 | | | | | 71,6 | | | | | 196 | | | | 70 | | SAE 1 3/4"x16C | 3" x 0,095" |
| 1510 | 99.151.010 | DIN,2 | 120 | 75,0 | 81 | - | 8 | 8,0 | 10,2 | 75,0 | - | 2,8 | 101,5 | 136 | 60 | 20 | SAE 1 3/4"x16C | (*) |
| | 99.151.013 | | | | | 71,6 | | | | | 195 | | | | | | SAE 1 3/4"x16C | 3" x 0,095" |
| | 99.151.014 | | | | | 84,6 | | | | | 195 | | | | | | SAE 1 3/4"x16C | 3 1/2 " x 0,095" |
| | 99.151.020 | DIN,2 | 150 | 90,0 | 103 | - | 8 | 11,0 | 12,2 | 90,0 | - | 3,4 | 130,0 | 136 | 60 | 20 | SAE 1 3/4"x16C | (*) |
| | 99.151.023 | | | | | 71,6 | | | | | 195 | | | | | | SAE 1 3/4"x16C | 3" x 0,095" |
| | 99.151.024 | | | | | 84,6 | | | | | 195 | | | | | | SAE 1 3/4"x16C | 3 1/2 " x 0,095" |
| | 99.151.030 | DIN,2 | 150 | 90,0 | 103 | - | 8 | 11,0 | 10,2 | 90,0 | - | 3,4 | 130,0 | 136 | 60 | 20 | SAE 1 3/4"x16C | (*) |
| | 99.151.033 | | | | | 71,6 | | | | | 195 | | | | | | SAE 1 3/4"x16C | 3" x 0,095" |
| | 99.151.034 | | | | | 84,6 | | | | | 195 | | | | | | SAE 1 3/4"x16C | 3 1/2 " x 0,095" |
| | 99.151.040 | DIN,2 | 165 | 95,0 | 109 | - | 8 | 11,0 | 16,2 | 90,0 | - | 3,4 | 140,0 | 136 | 60 | 20 | SAE 1 3/4"x16C | (*) |
| | 99.151.043 | | | | | 71,6 | | | | | 195 | | | | | | SAE 1 3/4"x16C | 3" x 0,095" |
| | 99.151.044 | | | | | 84,6 | | | | | 195 | | | | | | SAE 1 3/4"x16C | 3 1/2 " x 0,095" |
| | 99.151.050 | DIN,2 | 120 | 75,0 | 81 | - | 8 | 8,0 | 8,1 | 75,0 | - | 2,8 | 101,5 | 136 | 60 | 20 | SAE 1 3/4"x16C | (*) |
| | 99.151.053 | | | | | 71,6 | | | | | 195 | | | | | | SAE 1 3/4"x16C | 3" x 0,095" |
| | 99.151.054 | | | | | 84,6 | | | | | 195 | | | | | | SAE 1 3/4"x16C | 3 1/2 " x 0,095" |
| | 99.151.100 | SAE,1 | 146 | 95,2 | - | - | 4 | 9,1 | 12,8 | 63,5 | - | 1,6 | 120,7 | 136 | 60 | 20 | SAE 1 3/4"x16C | (*) |
| | 99.151.101 | | | | | 71,6 | | | | | 195 | | | | | | SAE 1 3/4"x16C | 3" x 0,095" |
| | 99.151.102 | | | | | 84,6 | | | | | 195 | | | | | | SAE 1 3/4"x16C | 3 1/2 " x 0,095" |
| | 99.151.110 | SAE,1 | 146 | 95,2 | - | - | 4 | 9,1 | 14,2 | 63,5 | - | 1,6 | 120,7 | 136 | 60 | 20 | SAE 1 3/4"x16C | (*) |
| | 99.151.111 | | | | | 71,6 | | | | | 195 | | | | | | SAE 1 3/4"x16C | 3" x 0,095" |
| | 99.151.112 | | | | | 84,6 | | | | | 195 | | | | | | SAE 1 3/4"x16C | 3 1/2 " x 0,095" |
| | 99.151.120 | SAE,2 | 130 | 82,5 | 90,0 | - | 8 | 9,0 | 10,1 | 75,0 | - | 2,8 | 112,0 | 136 | 60 | 20 | SAE 1 3/4"x16C | (*) |
| | 99.151.121 | | | | | 71,6 | | | | | 195 | | | | | | SAE 1 3/4"x16C | 3" x 0,095" |
| | 99.151.122 | | | | | 84,6 | | | | | 195 | | | | | | SAE 1 3/4"x16C | 3 1/2 " x 0,095" |
| | 99.151.130 | SAE,1 | 146 | 95,2 | - | - | 4 | 9,1 | 14,2 | 63,5 | - | 1,8 | 120,7 | 136 | 60 | 20 | SAE 1 3/4"x16C | (*) |
| | 99.151.131 | | | | | 71,6 | | | | | 195 | | | | | | SAE 1 3/4"x16C | 3" x 0,095" |
| | 99.151.132 | | | | | 84,6 | | | | | 195 | | | | | | SAE 1 3/4"x16C | 3 1/2 " x 0,095" |
| | 99.151.200 | XS,3 | 120 | - | - | - | 4 | 15,5 | 11,1 | 70,0 | - | - | 100,0 | 136 | 60 | 20 | SAE 1 3/4"x16C | (*) |
| | 99.151.201 | | | | | 71,6 | | | | | 195 | | | | | | SAE 1 3/4"x16C | 3" x 0,095" |
| | 99.151.202 | | | | | 84,6 | | | | | 195 | | | | | | SAE 1 3/4"x16C | 3 1/2 " x 0,095" |

E= NUMBER OF HOLES / LOCHANZAHL / DELİK SAYISI
ß= JOINT ANGLE / BEUGEWINKEL / MAFSAL AÇISI
O= SPIGIT DEPTH / ZENTRIERBOHRUNGTIEFE / SPİGOT DERİNLİĞİ
(*) WITHOUT SLIP STUB SHAFT / OHNE WELLENZAPFEN / KAYICI MIL HARIC

## SLIP JOINTS / WELLENGELENKE / KAYICI MAFSALLAR



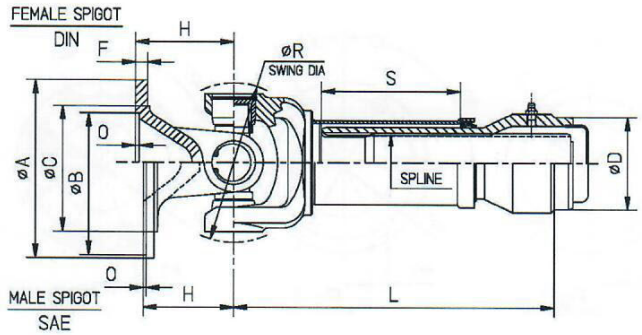


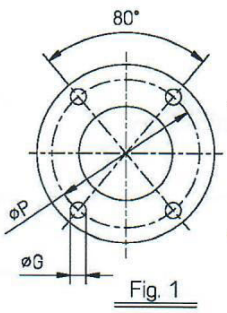


Fig. 1

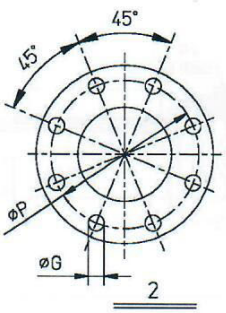


2

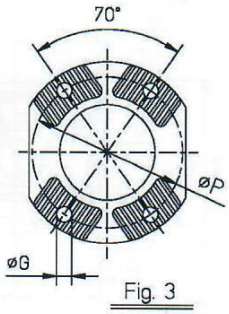


Fig. 3

**KAT-99/163** **25/12/2008**

| SERIE BAUGR SERI | JOINT NO GELENK NR MAFSAL NO | FIG | A | B | C | D | E | F | G | H | L | O | P | R | S | ß° | SPLINE | TUBE O.D.x THICK. ROHRDURCHM.xDICKE BORU ÇAPIxET KAL. |
|---|---|---|---|---|---|---|---|---|---|---|---|---|---|---|---|---|---|---|
| | 99.148.030 | | | | | - | | | | | - | | | | | | 45x2,5x16 DIN5480 | (*) |
| | 99.148.031 | DIN,2 | 120 | 75,0 | 81 | 71,6 | 8 | 9,0 | 10,2 | 65,0 | 218 | 2,5 | 101,5 | 122 | 90 | 22 | 45x2,5x16 DIN5480 | Ø3" x 0,095" |
| | 99.148.032 | | | | | 84,3 | | | | | 218 | | | | | | 45x2,5x16 DIN5480 | Ø3,5" x 0,095" |
| | 99.148.040 | | | | | - | | | | | - | | | | | | 45x2,5x16 DIN5480 | (*) |
| | 99.148.041 | DIN,2 | 120 | 75,0 | 81 | 71,6 | 8 | 8,0 | 8,2 | 65,0 | 218 | 2,5 | 101,5 | 122 | 70 | 22 | 45x2,5x16 DIN5480 | Ø3" x 0,095" |
| | 99.148.042 | | | | | 84,3 | | | | | 218 | | | | | | 45x2,5x16 DIN5480 | Ø3,5" x 0,095" |
| | 99.148.140 | | | | | - | | | | | - | | | | | | 45x2,5x16 DIN5480 | (*) |
| 1480 | 99.148.141 | SAE,1 | 116 | 69,8 | - | 71,6 | 4 | 9,0 | 12,2 | 65,0 | 218 | 1,4 | 95,3 | 122 | 70 | 22 | 45x2,5x16 DIN5480 | Ø3" x 0,095" |
| | 99.148.142 | | | | | 84,3 | | | | | 218 | | | | | | 45x2,5x16 DIN5480 | Ø3,5" x 0,095" |
| | 99.148.150 | | | | | - | | | | | - | | | | | | 45x2,5x16 DIN5480 | (*) |
| | 99.148.151 | SAE,1 | 146 | 95,2 | - | 71,6 | 4 | 9,0 | 14,3 | 50,8 | 218 | 1,4 | 120,7 | 122 | 70 | 22 | 45x2,5x16 DIN5480 | Ø3" x 0,095" |
| | 99.148.152 | | | | | 84,3 | | | | | 218 | | | | | | 45x2,5x16 DIN5480 | Ø3,5" x 0,095" |
| | 99.148.210 | | | | | - | | | | | - | | | | - | | 45x2,5x16 DIN5480 | (*) |
| | 99.148.211 | XS,3 | 120 | - | - | 71,6 | 4 | 15,5 | 11,1 | 63,5 | 218 | - | 100,0 | 129 | 70 | 27° | 45x2,5x16 DIN5480 | Ø3" x 0,095" |
| | 99.148.212 | | | | | 84,3 | | | | | 218 | | | | 70 | | 45x2,5x16 DIN5480 | Ø3,5" x 0,095" |
| | 99.163.010 | | | | | - | | | | | - | | | | | | 55x2,5x20 DIN5480 | (*) |
| | 99.163.011 | DIN,2 | 120 | 75,0 | 81 | 83,4 | 8 | 8,0 | 8,1 | 75,0 | 293 | 2,8 | 101,5 | 136 | 110 | 30 | 55x2,5x20 DIN5480 | ø90 x 3,5mm |
| | 99.163.012 | | | | | 84,3 | | | | | 293 | | | | | | 55x2,5x20 DIN5480 | Ø3,5" x 0,095" |
| | 99.163.013 | | | | | 85,1 | | | | | 293 | | | | | | 55x2,5x20 DIN5480 | ø90 x 2,5 |
| | 99.163.020 | | | | | - | | | | | - | | | | | | 55x2,5x20 DIN5480 | (*) |
| | 99.163.021 | DIN,2 | 120 | 75,0 | 81 | 83,4 | 8 | 8,0 | 10,2 | 75,0 | 293 | 2,8 | 101,5 | 136 | 110 | 30 | 55x2,5x20 DIN5480 | ø90 x 3,5mm |
| | 99.163.022 | | | | | 84,3 | | | | | 293 | | | | | | 55x2,5x20 DIN5480 | Ø3,5" x 0,095" |
| | 99.163.023 | | | | | 85,1 | | | | | 293 | | | | | | 55x2,5x20 DIN5480 | ø90 x 2,5 |
| | 99.163.030 | | | | | - | | | | | - | | | | | | 55x2,5x20 DIN5480 | (*) |
| | 99.163.031 | DIN,2 | 150 | 90,0 | 103 | 83,4 | 8 | 11,0 | 10,2 | 90,0 | 293 | 3,4 | 130,0 | 136 | 110 | 30 | 55x2,5x20 DIN5480 | ø90 x 3,5mm |
| | 99.163.032 | | | | | 84,3 | | | | | 293 | | | | | | 55x2,5x20 DIN5480 | Ø3,5" x 0,095" |
| | 99.163.033 | | | | | 85,1 | | | | | 293 | | | | | | 55x2,5x20 DIN5480 | ø90 x 2,5 |
| | 99.163.040 | | | | | - | | | | | - | | | | | | 55x2,5x20 DIN5480 | (*) |
| | 99.163.041 | DIN,2 | 150 | 90,0 | 103 | 83,4 | 8 | 11,0 | 12,2 | 90,0 | 293 | 3,4 | 130,0 | 136 | 110 | 30 | 55x2,5x20 DIN5480 | ø90 x 3,5mm |
| | 99.163.042 | | | | | 84,3 | | | | | 293 | | | | | | 55x2,5x20 DIN5480 | Ø3,5" x 0,095" |
| 1630 | 99.163.043 | | | | | 85,1 | | | | | 293 | | | | | | 55x2,5x20 DIN5480 | ø90 x 2,5 |
| | 99.163.050 | | | | | - | | | | | - | | | | | | 55x2,5x20 DIN5480 | (*) |
| | 99.163.051 | DIN,2 | 165 | 95,0 | 109 | 83,4 | 8 | 11,0 | 16,2 | 90,0 | 293 | 3,4 | 140,0 | 136 | 110 | 30 | 55x2,5x20 DIN5480 | ø90 x 3,5mm |
| | 99.163.052 | | | | | 84,3 | | | | | 293 | | | | | | 55x2,5x20 DIN5480 | Ø3,5" x 0,095" |
| | 99.163.053 | | | | | 85,1 | | | | | 293 | | | | | | 55x2,5x20 DIN5480 | ø90 x 2,5 |
| | 99.163.110 | | | | | - | | | | | - | | | | | | 55x2,5x20 DIN5480 | (*) |
| | 99.163.111 | SAE,1 | 146 | 95,2 | - | 83,4 | 4 | 9,1 | 12,8 | 63,5 | 293 | 1,6 | 120,7 | 136 | 110 | 30 | 55x2,5x20 DIN5480 | ø90 x 3,5mm |
| | 99.163.112 | | | | | 84,3 | | | | | 293 | | | | | | 55x2,5x20 DIN5480 | Ø3,5" x 0,095" |
| | 99.163.113 | | | | | 85,1 | | | | | 293 | | | | | | 55x2,5x20 DIN5480 | ø90 x 2,5 |
| | 99.163.120 | | | | | - | | | | | - | | | | | | 55x2,5x20 DIN5480 | (*) |
| | 99.163.121 | SAE,1 | 146 | 95,2 | - | 83,4 | 4 | 9,1 | 14,2 | 63,5 | 293 | 1,6 | 120,7 | 136 | 110 | 30 | 55x2,5x20 DIN5480 | ø90 x 3,5mm |
| | 99.163.122 | | | | | 84,3 | | | | | 293 | | | | | | 55x2,5x20 DIN5480 | Ø3,5" x 0,095" |
| | 99.163.123 | | | | | 85,1 | | | | | 293 | | | | | | 55x2,5x20 DIN5480 | ø90 x 2,5 |
| | 99.163.200 | | | | | - | | | | | - | | | | | | 55x2,5x20 DIN5480 | (*) |
| | 99.163.201 | XS,3 | 120 | - | - | 83,4 | 4 | 16,5 | 11,2 | 71,5 | 293 | - | 100,0 | 136 | 110 | 30 | 55x2,5x20 DIN5480 | ø90 x 3,5mm |
| | 99.163.202 | | | | | 84,3 | | | | | 293 | | | | | | 55x2,5x20 DIN5480 | Ø3,5" x 0,095" |
| | 99.163.203 | | | | | 85,1 | | | | | 293 | | | | | | 55x2,5x20 DIN5480 | ø90 x 2,5 |

E= NUMBER OF HOLES / LOCHANZAHL / DELİK SAYISI
ß= JOINT ANGLE / BEUGEWINKEL / MAFSAL AÇISI
O= SPIGIT DEPTH / ZENTRIERBOHRUNGTIEFE / SPİGOT DERİNLİĞİ
(*) WITHOUT TUBE SLEEVE-SLIPSTUB / OHNE KEILNABE- WELLENZAPFEN / TÜP KAYICI-KAYICI MIL HARIC

# SLIP JOINTS / WELLENGELENKE / KAYICI MAFSALLAR

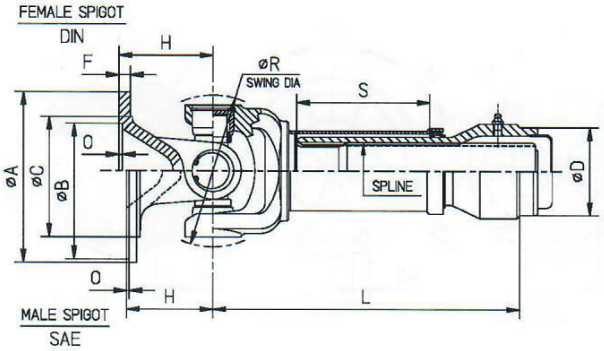


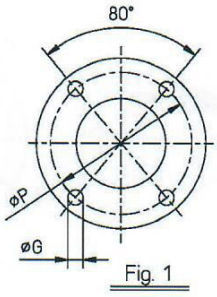

Fig. 1

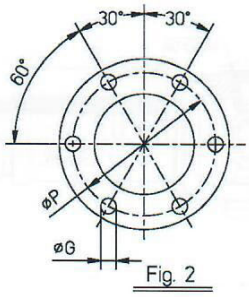

Fig. 2

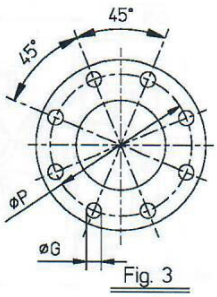

Fig. 3

**KAT-99/420** **25/12/2008**

| SERIE BAUGR SERI | JOINT NO GELENK NR MAFSAL NO | FIG | A | B | C | D | E | F | G | H | L | O | P | R | S | ß° | SPLINE | TUBE O.D.x THICK. ROHRDURCHM.xDICKE BORU ÇAPIxET KAL. |
|---|---|---|---|---|---|---|---|---|---|---|---|---|---|---|---|---|---|---|
| 420 | 99.420.010 | | | | | - | | | | | - | | | | - | 25 | 38x2x18 DIN5480 | (*) |
| | 99.420.011 | | | | | 44,1 | | | | | 208,5 | | | | 85 | 25 | 38x2x18 DIN5480 | 52 x 4mm |
| | 99.420.012 | DIN,2 | 100 | 57,0 | 65 | 73,3 | 6 | 6,8 | 8,2 | 58 | 200,5 | 3,0 | 84,0 | 98 | 85 | 25 | 38x2x18 DIN5480 | 3" x 0,064" |
| | 99.420.013 | | | | | 71,7 | | | | | 200,5 | | | | 85 | 25 | 38x2x18 DIN5480 | 3" x 0,095" |
| | 99.420.014 | | | | | 46,1 | | | | | 208,5 | | | | 110 | 25 | 38x2x18 DIN5480 | 54 x 4mm |
| | 99.420.020 | | | | | - | | | | | - | | | | - | 25 | 38x2x18 DIN5480 | (*) |
| | 99.420.021 | | | | | 44,1 | | | | | 208,5 | | | | 85 | 25 | 38x2x18 DIN5480 | 52 x 4mm |
| | 99.420.022 | DIN,3 | 120 | 75,0 | 81 | 73,3 | 8 | 8,0 | 10,2 | 54 | 200,5 | 3,0 | 101,5 | 98 | 85 | 25 | 38x2x18 DIN5480 | 3" x 0,064" |
| | 99.420.023 | | | | | 71,7 | | | | | 200,5 | | | | 85 | 25 | 38x2x18 DIN5480 | 3" x 0,095" |
| | 99.420.024 | | | | | 46,1 | | | | | 208,5 | | | | 110 | 25 | 38x2x18 DIN5480 | 54 x 4mm |
| | 99.420.100 | | | | | - | | | | | - | | | | - | 25 | 38x2x18 DIN5480 | (*) |
| | 99.420.101 | | | | | 44,1 | | | | | 208,5 | | | | 85 | 25 | 38x2x18 DIN5480 | 52 x 4mm |
| | 99.420.102 | SAE,1 | 116 | 69,9 | - | 73,3 | 4 | 8,0 | 11,3 | 40,0 | 200,5 | 1,4 | 95,2 | 98 | 85 | 25 | 38x2x18 DIN5480 | 3" x 0,064" |
| | 99.420.103 | | | | | 71,7 | | | | | 200,5 | | | | 85 | 25 | 38x2x18 DIN5480 | 3" x 0,095" |
| | 99.420.104 | | | | | 46,1 | | | | | 208,5 | | | | 110 | 25 | 38x2x18 DIN5480 | 54 x 4mm |
| | 99.420.110 | | | | | - | | | | | - | | | | - | 25 | 38x2x18 DIN5480 | (*) |
| | 99.420.111 | | | | | 44,1 | | | | | 208,5 | | | | 85 | 25 | 38x2x18 DIN5480 | 52 x 4mm |
| | 99.420.112 | SAE,1 | 114,5 | 69,8 | - | 73,3 | 4 | 8,0 | 12,3 | 40,0 | 200,5 | 1,4 | 95,2 | 98 | 85 | 25 | 38x2x18 DIN5480 | 3" x 0,064" |
| | 99.420.113 | | | | | 71,7 | | | | | 200,5 | | | | 85 | 25 | 38x2x18 DIN5480 | 3" x 0,095" |
| | 99.420.114 | | | | | 46,1 | | | | | 208,5 | | | | 110 | 25 | 38x2x18 DIN5480 | 54 x 4mm |
| | 99.420.110 | | | | | - | | | | | - | | | | - | 25 | 38x2x18 DIN5480 | (*) |
| | 99.420.111 | | | | | 44,1 | | | | | 208,5 | | | | 85 | 25 | 38x2x18 DIN5480 | 52 x 4mm |
| | 99.420.112 | SAE,1 | 100 | 60,3 | 61,1 | 73,3 | 4 | 6,8 | 10,2 | 58,0 | 200,5 | 1,4 | 79,3 | 98 | 85 | 25 | 38x2x18 DIN5480 | 3" x 0,064" |
| | 99.420.113 | | | | | 71,7 | | | | | 200,5 | | | | 85 | 25 | 38x2x18 DIN5480 | 3" x 0,095" |
| | 99.420.114 | | | | | 46,1 | | | | | 208,5 | | | | 110 | 25 | 38x2x18 DIN5480 | 54 x 4mm |
| | 99.420.120 | | | | | - | | | | | - | | | | - | 25 | 38x2x18 DIN5480 | (*) |
| | 99.420.121 | | | | | 44,1 | | | | | 208,5 | | | | 85 | 25 | 38x2x18 DIN5480 | 52 x 4mm |
| | 99.420.122 | SAE,1 | 116 | 69,8 | - | 73,3 | 4 | 9,0 | 12,3 | 53,0 | 200,5 | 1,4 | 95,2 | 98 | 85 | 25 | 38x2x18 DIN5480 | 3" x 0,064" |
| | 99.420.123 | | | | | 71,7 | | | | | 200,5 | | | | 85 | 25 | 38x2x18 DIN5480 | 3" x 0,095" |
| | 99.420.124 | | | | | 46,1 | | | | | 208,5 | | | | 110 | 25 | 38x2x18 DIN5480 | 54 x 4mm |
| | 99.420.200 | | | | | - | | | | | - | | | | - | | SAE 1 1/6" x 16C | (*) |
| | 99.420.201 | SAE,1 | 116 | 69,9 | - | 73,3 | 4 | 8,0 | 11,3 | 40,0 | 207 | 1,4 | 95,2 | 98 | 60 | 27 | SAE 1 1/6" x 16C | 3" x 0,064" |
| | 99.420.202 | | | | | 71,7 | | | | | 207 | | | | 60 | | SAE 1 1/6" x 16C | 3" x 0,095" |
| | 99.420.210 | | | | | - | | | | | - | | | | - | | SAE 1 1/6" x 16C | (*) |
| | 99.420.211 | SAE,1 | 114,5 | 69,8 | - | 73,3 | 4 | 8,0 | 12,3 | 40,0 | 207 | 1,4 | 95,2 | 98 | 60 | 27 | SAE 1 1/6" x 16C | 3" x 0,064" |
| | 99.420.212 | | | | | 71,7 | | | | | 207 | | | | 60 | | SAE 1 1/6" x 16C | 3" x 0,095" |
| | 99.420.220 | | | | | - | | | | | - | | | | - | | SAE 1 1/6" x 16C | (*) |
| | 99.420.221 | SAE,1 | 100 | 60,3 | 61,1 | 73,3 | 4 | 6,8 | 10,2 | 58,0 | 207 | 1,4 | 79,3 | 98 | 60 | 27 | SAE 1 1/6" x 16C | 3" x 0,064" |
| | 99.420.222 | | | | | 71,7 | | | | | 207 | | | | 60 | | SAE 1 1/6" x 16C | 3" x 0,095" |
| | 99.420.230 | | | | | - | | | | | - | | | | - | | SAE 1 1/6" x 16C | (*) |
| | 99.420.231 | SAE,1 | 116 | 69,8 | - | 73,3 | 4 | 9,0 | 12,3 | 53,0 | 207 | 1,4 | 95,2 | 98 | 60 | 27 | SAE 1 1/6" x 16C | 3" x 0,064" |
| | 99.420.232 | | | | | 71,7 | | | | | 207 | | | | 60 | | SAE 1 1/6" x 16C | 3" x 0,095" |
| | 99.420.300 | | | | | - | | | | | - | | | | - | | SAE 1 1/6" x 16C | (*) |
| | 99.420.301 | DIN,2 | 100 | 57,0 | 65 | 73,3 | 6 | 6,8 | 8,2 | 58 | 207 | 3,0 | 84,0 | 98 | 60 | 27 | SAE 1 1/6" x 16C | 3" x 0,064" |
| | 99.420.302 | | | | | 71,7 | | | | | 207 | | | | 60 | | SAE 1 1/6" x 16C | 3" x 0,095" |
| | 99.420.310 | | | | | - | | | | | - | | | | - | | SAE 1 1/6" x 16C | (*) |
| | 99.420.311 | DIN,3 | 120 | 75,0 | 81 | 73,3 | 8 | 8,0 | 10,2 | 54 | 207 | 3,0 | 101,5 | 98 | 60 | 27 | SAE 1 1/6" x 16C | 3" x 0,064" |
| | 99.420.312 | | | | | 71,7 | | | | | 207 | | | | 60 | | SAE 1 1/6" x 16C | 3" x 0,095" |

E= NUMBER OF HOLES / LOCHANZAHL / DELİK SAYISI
ß= JOINT ANGLE / BEUGEWINKEL / MAFSAL AÇISI
O= SPIGIT DEPTH / ZENTRIERBOHRUNGTIEFE / SPİGOT DERİNLİĞİ
(*) WITHOUT TUBE SLEEVE-SLIPSTUB / OHNE KEILNABE- WELLENZAPFEN / TÜP KAYICI-KAYICI MIL HARIC

## SLIP JOINTS / WELLENGELENKE / KAYICI MAFSALLAR



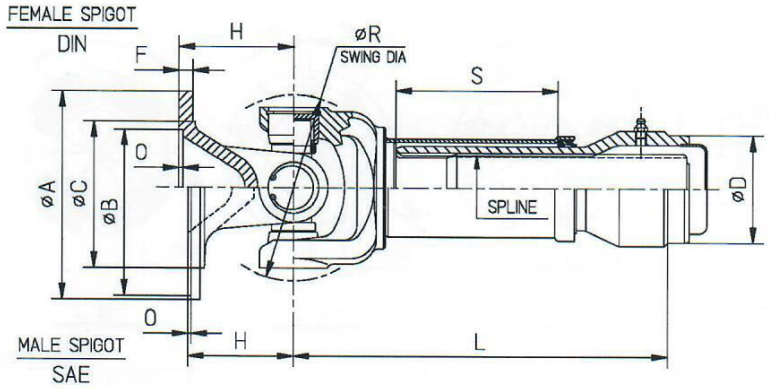


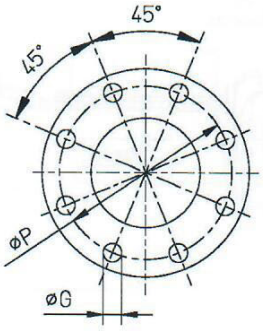


Fig. 1

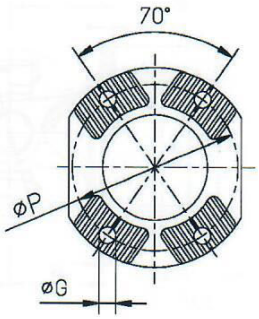


Fig. 2

**KAT-99/381** **26/12/2008**

| SERIE BAUGR SERI | JOINT NO GELENK NR MAFSAL NO | FIG | A | B | C | D | E | F | G | H | L | O | P | R | S | ß° | SPLINE | TUBE O.D.x THICK. ROHRDURCHM.xDICKE BORU ÇAPIxET KAL. |
|---|---|---|---|---|---|---|---|---|---|---|---|---|---|---|---|---|---|---|
| 381 | 99.381.200 | XS,2 | 120 | - | - | - | 4 | 15,5 | 11,1 | (70) | - | - | 100,0 | 126 | - | 25 | 55x2,5x20 DIN5480 | (*) |
| | 99.381.201 | | | | | 85,1 | | | | | 295 | | | | 110 | | 55x2,5x20 DIN5480 | 90 x 2,5mm |
| | 99.381.202 | | | | | 84,3 | | | | | 295 | | | | 110 | | 55x2,5x20 DIN5480 | 3,5" x 0,095" |
| | 99.381.203 | | | | | 83,4 | | | | | 295 | | | | 110 | | 55x2,5x20 DIN5480 | 90 x 3,5mm |
| | 99.381.204 | | | | | 71,6 | | | | | 275 | | | | 110 | | 55x2,5x20 DIN5480 | 3" x 0,095" |
| | 99.381.210 | XS,2 | 120 | - | - | - | 4 | 14,5 | 11,1 | (65) | - | - | 100,0 | 126 | - | 25 | 55x2,5x20 DIN5480 | (*) |
| | 99.381.211 | | | | | 85,1 | | | | | 295 | | | | 110 | | 55x2,5x20 DIN5480 | 90 x 2,5mm |
| | 99.381.212 | | | | | 84,3 | | | | | 295 | | | | 110 | | 55x2,5x20 DIN5480 | 3,5" x 0,095" |
| | 99.381.213 | | | | | 83,4 | | | | | 295 | | | | 110 | | 55x2,5x20 DIN5480 | 90 x 3,5mm |
| | 99.381.214 | | | | | 71,6 | | | | | 275 | | | | 110 | | 55x2,5x20 DIN5480 | 3" x 0,095" |
| 385 | 99.385.010 | DIN,1 | 150 | 90,0 | 104 | - | 8 | 12,0 | 12,2 | 75,0 | - | 3,5 | 130,0 | 148 | - | 24 | 65x2,5x24 DIN5480 | (*) |
| | 99.385.011 | | | | | 82,1 | | | | | 327 | | | | 130 | | 65x2,5x24 DIN5480 | 92 x 5mm |
| | 99.385.012 | | | | | 79,2 | | | | | 327 | | | | 130 | | 65x2,5x24 DIN5480 | 92 x 6,5mm |
| | 99.385.013 | | | | | 82,1 | | | | | 367 | | | | 150 | | 65x2,5x24 DIN5480 | 92 x 5mm |
| | 99.385.014 | | | | | 90,3 | | | | | 329 | | | | 130 | | 65x2,5x24 DIN5480 | 100 x 5mm |
| | 99.385.020 | DIN,1 | 165 | 95,0 | 109 | - | 8 | 12,0 | 16,2 | 82,5 | - | 3,0 | 140,0 | 148 | - | 24 | 65x2,5x24 DIN5480 | (*) |
| | 99.385.021 | | | | | 82,1 | | | | | 327 | | | | 130 | | 65x2,5x24 DIN5480 | 92 x 5mm |
| | 99.385.022 | | | | | 79,2 | | | | | 327 | | | | 130 | | 65x2,5x24 DIN5480 | 92 x 6,5mm |
| | 99.385.023 | | | | | 82,1 | | | | | 367 | | | | 150 | | 65x2,5x24 DIN5480 | 92 x 5mm |
| | 99.385.024 | | | | | 90,3 | | | | | 329 | | | | 130 | | 65x2,5x24 DIN5480 | 100 x 5mm |
| | 99.385.030 | DIN,1 | 180 | 110,0 | 119 | - | 8 | 12,0 | 14,2 | 82,5 | - | 3,5 | 155,5 | 148 | - | 24 | 65x2,5x24 DIN5480 | (*) |
| | 99.385.031 | | | | | 82,1 | | | | | 327 | | | | 130 | | 65x2,5x24 DIN5480 | 92 x 5mm |
| | 99.385.032 | | | | | 79,2 | | | | | 327 | | | | 130 | | 65x2,5x24 DIN5480 | 92 x 6,5mm |
| | 99.385.033 | | | | | 82,1 | | | | | 367 | | | | 150 | | 65x2,5x24 DIN5480 | 92 x 5mm |
| | 99.385.034 | | | | | 90,3 | | | | | 329 | | | | 130 | | 65x2,5x24 DIN5480 | 100 x 5mm |
| | 99.385.040 | DIN,1 | 180 | 110,0 | 119 | - | 8 | 12,0 | 16,2 | 82,5 | - | 3,5 | 155,5 | 148 | - | 24 | 65x2,5x24 DIN5480 | (*) |
| | 99.385.041 | | | | | 82,1 | | | | | 327 | | | | 130 | | 65x2,5x24 DIN5480 | 92 x 5mm |
| | 99.385.042 | | | | | 79,2 | | | | | 327 | | | | 130 | | 65x2,5x24 DIN5480 | 92 x 6,5mm |
| | 99.385.043 | | | | | 82,1 | | | | | 367 | | | | 150 | | 65x2,5x24 DIN5480 | 92 x 5mm |
| | 99.385.044 | | | | | 90,3 | | | | | 329 | | | | 130 | | 65x2,5x24 DIN5480 | 100 x 5mm |
| | 99.385.050 | DIN,1 | 180 | 110,0 | 119 | - | 8 | 12,0 | 12,2 | 82,5 | - | 3,5 | 155,5 | 148 | - | 24 | 65x2,5x24 DIN5480 | (*) |
| | 99.385.051 | | | | | 82,1 | | | | | 327 | | | | 130 | | 65x2,5x24 DIN5480 | 92 x 5mm |
| | 99.385.052 | | | | | 79,2 | | | | | 327 | | | | 130 | | 65x2,5x24 DIN5480 | 92 x 6,5mm |
| | 99.385.053 | | | | | 82,1 | | | | | 367 | | | | 150 | | 65x2,5x24 DIN5480 | 92 x 5mm |
| | 99.385.054 | | | | | 90,3 | | | | | 329 | | | | 130 | | 65x2,5x24 DIN5480 | 100 x 5mm |
| | 99.385.100 | SAE,1 | 175 | 168,2 | 127 | - | 8 | 10,5 | 9,7 | 82,5 | - | 1,6 | 155,5 | 148 | - | 24 | 65x2,5x24 DIN5480 | (*) |
| | 99.385.101 | | | | | 82,1 | | | | | 327 | | | | 130 | | 65x2,5x24 DIN5480 | 92 x 5mm |
| | 99.385.102 | | | | | 79,2 | | | | | 327 | | | | 130 | | 65x2,5x24 DIN5480 | 92 x 6,5mm |
| | 99.385.103 | | | | | 82,1 | | | | | 367 | | | | 150 | | 65x2,5x24 DIN5480 | 92 x 5mm |
| | 99.385.104 | | | | | 90,3 | | | | | 329 | | | | 130 | | 65x2,5x24 DIN5480 | 100 x 5mm |
| | 99.385.200 | XS,2 | 150 | - | - | - | 4 | 18,5 | 13,1 | 75,0 | - | - | 130,0 | 148 | - | 24 | 65x2,5x24 DIN5480 | (*) |
| | 99.385.201 | | | | | 82,1 | | | | | 327 | | | | 130 | | 65x2,5x24 DIN5480 | 92 x 5mm |
| | 99.385.202 | | | | | 79,2 | | | | | 327 | | | | 130 | | 65x2,5x24 DIN5480 | 92 x 6,5mm |
| | 99.385.203 | | | | | 82,1 | | | | | 367 | | | | 150 | | 65x2,5x24 DIN5480 | 92 x 5mm |
| | 99.385.204 | | | | | 90,3 | | | | | 329 | | | | 130 | | 65x2,5x24 DIN5480 | 100 x 5mm |
| | 99.385.210 | XS,2 | 180 | - | - | - | 4 | 20,5 | 15,1 | 90,0 | - | - | 150,0 | 148 | - | 24 | 65x2,5x24 DIN5480 | (*) |
| | 99.385.211 | | | | | 82,1 | | | | | 327 | | | | 130 | | 65x2,5x24 DIN5480 | 92 x 5mm |
| | 99.385.212 | | | | | 79,2 | | | | | 327 | | | | 130 | | 65x2,5x24 DIN5480 | 92 x 6,5mm |
| | 99.385.213 | | | | | 82,1 | | | | | 367 | | | | 150 | | 65x2,5x24 DIN5480 | 92 x 5mm |
| | 99.385.214 | | | | | 90,3 | | | | | 329 | | | | 130 | | 65x2,5x24 DIN5480 | 100 x 5mm |

E= NUMBER OF HOLES / LOCHANZAHL / DELİK SAYISI
ß= JOINT ANGLE / BEUGEWINKEL / MAFSAL AÇISI
O= SPIGIT DEPTH / ZENTRIERBOHRUNGTIEFE / SPİGOT DERİNLİĞİ
(*) WITHOUT TUBE SLEEVE-SLIPSTUB / OHNE KEILNABE- WELLENZAPFEN / TÜP KAYICI-KAYICI MIL HARIC

# SLIP JOINTS / WELLENGELENKE / KAYICI MAFSALLAR

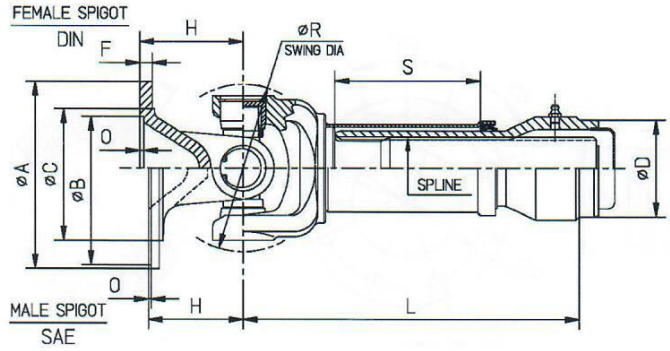


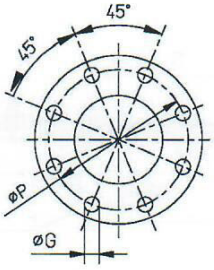


Fig. 1

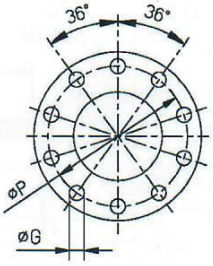


Fig. 2

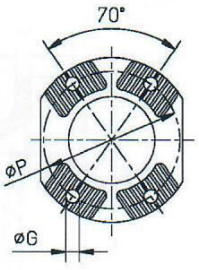


Fig. 3

**KAT-99/4** **26/12/2008**

| SERIE BAUGR SERI | JOINT NO GELENK NR MAFSAL NO | FIG | A | B | C | D | E | F | G | H | L | O | P | R | S | ß° | SPLINE | TUBE O.D.x THICK. ROHRDURCHM.xDICKE BORU ÇAPIxET KAL. |
|---|---|---|---|---|---|---|---|---|---|---|---|---|---|---|---|---|---|---|
| 389 | 99.389.210 | XS,3 | 180 | - | - | - | 4 | 17,5 | 15,1 | 92,5 | - | - | 150,0 | 159 | 150 | 30 | 72x2,5x27 DIN5480 | (*) |
| | 99.389.211 | | | | | 90,1 | | | | | 373 | | | | | | 72x2,5x27 DIN5480 | 100 x 5mm |
| | 99.389.220 | XS,3 | 150 | - | - | - | 4 | 17,5 | 13,1 | 100 | - | - | 130,0 | 159 | 160 | 44 | 72x2,5x27 DIN5480 | (*) |
| | 99.389.221 | | | | | 90,1 | | | | | 363 | | | | | | 72x2,5x27 DIN5480 | 100 x 5mm |
| | 99.389.230 | XS,3 | 165 | - | - | - | 4 | 17,5 | 13,1 | 97 | - | - | 140,0 | 159 | 160 | 36 | 72x2,5x27 DIN5480 | (*) |
| | 99.389.231 | | | | | 90,1 | | | | | 363 | | | | | | 72x2,5x27 DIN5480 | 100 x 5mm |
| | 99.389.240 | XS,3 | 150 | - | - | - | 4 | 18,5 | 13,1 | 85,0 | - | - | 130,0 | 159 | 160 | 36 | 72x2,5x27 DIN5480 | (*) |
| | 99.389.241 | | | | | 90,1 | | | | | 363 | | | | | | 72x2,5x27 DIN5480 | 100 x 5mm |
| | 99.389.260 | XS,3 | 180 | - | - | - | 4 | 17,5 | 15,1 | 92,5 | - | - | 150,0 | 159 | 110 | 30 | T31-12/24-30° | (*) |
| | 99.389.261 | | | | | 112,1 | | | | | 256 | | | | | | T31-12/24-30° | 120 x 4mm |
| | 99.389.270 | XS,3 | 150 | - | - | - | 4 | 17,5 | 13,1 | 100 | - | - | 130,0 | 159 | 110 | 44 | T31-12/24-30° | (*) |
| | 99.389.271 | | | | | 112,1 | | | | | 256 | | | | | | T31-12/24-30° | 120 x 4mm |
| | 99.389.280 | XS,3 | 165 | - | - | - | 4 | 17,5 | 13,1 | 97 | - | - | 140,0 | 159 | 110 | 36 | T31-12/24-30° | (*) |
| | 99.389.281 | | | | | 112,1 | | | | | 256 | | | | | | T31-12/24-30° | 120 x 4mm |
| | 99.389.290 | XS,3 | 150 | - | - | - | 4 | 18,5 | 13,1 | 85,0 | - | | 130,0 | 159 | 110 | 36 | T31-12/24-30° | (*) |
| | 99.389.291 | | | | | 112,1 | | | | | 256 | | | | | | T31-12/24-30° | 120 x 4mm |
| | 99.389.300 | XS,3 | 150 | - | - | - | 4 | 18,5 | 13,1 | 82,0 | - | - | 130,0 | 159 | 110 | 36 | T31-12/24-30° | (*) |
| | 99.389.301 | | | | | 112,1 | | | | | 256 | | | | | | T31-12/24-30° | 120 x 4mm |
| | 99.389.310 | XS,3 | 180 | - | - | - | 4 | 20,5 | 15,1 | 84,5 | - | - | 150,0 | 159 | 110 | 36 | T31-12/24-30° | (*) |
| | 99.389.311 | | | | | 112,1 | | | | | 256 | | | | | | T31-12/24-30° | 120 x 4mm |
| 395 | 99.395.010 | | | | | - | | | | | - | | | | - | | - | (*) |
| | 99.395.011 | DIN,2 | 180 | 110,0 | 124 | 98,1 | 10 | 14,0 | 16,2 | 95 | 405 | 3,5 | 155,5 | 178 | 180 | 27 | 80x2,5x30 DIN5480 | 110 x 6mm |
| | 99.395.012 | | | | | 108,1 | | | | | 362 | | | | 160 | | 80x2,5x30 DIN5480 | 120 x 6mm |
| | 99.395.020 | | | | | - | | | | | - | | | | - | | - | (*) |
| | 99.395.021 | DIN,2 | 180 | 110,0 | 124 | 98,5 | 10 | 14,0 | 16,2 | 95 | 348 | 3,5 | 155,5 | 178 | 110 | 27 | 80x2,5x30 DIN5480 | 110 x 6mm |
| | 99.395.022 | | | | | 130,1 | | | | | 370 | | | | 110 | | 80x2,5x30 DIN5480 | 140 x 5mm |
| | 99.395.030 | | | | | - | | | | | - | | | | - | | - | (*) |
| | 99.395.031 | DIN,1 | 180 | 110,0 | 124 | 98,1 | 8 | 14,0 | 14,2 | 95 | 405 | 3,5 | 155,5 | 178 | 180 | 27 | 80x2,5x30 DIN5480 | 110 x 6mm |
| | 99.395.032 | | | | | 108,1 | | | | | 362 | | | | 160 | | 80x2,5x30 DIN5480 | 120 x 6mm |
| | 99.395.040 | | | | | - | | | | | - | | | | - | | - | (*) |
| | 99.395.041 | DIN,1 | 180 | 110,0 | 124 | 98,5 | 8 | 14,0 | 14,2 | 95 | 348 | 3,5 | 155,5 | 178 | 110 | 27 | 80x2,5x30 DIN5480 | 110 x 6mm |
| | 99.395.042 | | | | | 130,1 | | | | | 370 | | | | 110 | | 80x2,5x30 DIN5480 | 140 x 5mm |
| | 99.395.200 | | | | | - | | | | | - | | | | - | | - | (*) |
| | 99.395.201 | XS,3 | 180 | - | - | 98,1 | 4 | 17,5 | 15,1 | (95) | 405 | - | 150,0 | 178 | 180 | 27 | 80x2,5x30 DIN5480 | Ø110x6 |
| | 99.395.202 | | | | | 108,1 | | | | | 362 | | | | 160 | | 80x2,5x30 DIN5480 | Ø120x6 |
| | 99.395.210 | | | | | - | | | | | - | | | | - | | - | (*) |
| | 99.395.211 | XS,3 | 180 | - | - | 98,5 | 4 | 17,5 | 15,1 | (95) | 348 | - | 150,0 | 178 | 110 | 27 | 80x2,5x30 DIN5480 | Ø110x6 |
| | 99.395.212 | | | | | 130,1 | | | | | 370 | | | | 110 | | 80x2,5x30 DIN5480 | Ø140x5 |
| 446 | 99.446.200 | | | | | - | | | | | - | | | | - | | - | (*) |
| | 99.446.201 | XS,3 | 180 | - | - | 112,1 | 4 | 17,5 | 15,1 | 87 | 345 | - | 150,0 | 170 | 160 | 25 | 75x2,5x28 DIN5480 | 120 x 4mm |
| | 99.446.202 | | | | | 98,3 | | | | | 348 | | | | 160 | | 75x2,5x28 DIN5480 | 110 x 6mm |
| | 99.446.210 | | | | | - | | | | | - | | | | - | | - | (*) |
| | 99.446.211 | XS,3 | 150 | - | - | 112,1 | 4 | 18,5 | 13,1 | 87 | 345 | - | 130,0 | 170 | 160 | 25 | 75x2,5x28 DIN5480 | 120 x 4mm |
| | 99.446.212 | | | | | 98,3 | | | | | 348 | | | | 160 | | 75x2,5x28 DIN5480 | 110 x 6mm |
| | 99.446.220 | | | | | - | | | | | - | | | | - | | - | (*) |
| | 99.446.221 | XS,3 | 180 | - | - | 112,1 | 4 | 17,5 | 15,1 | 87 | 270 | - | 150,0 | 170 | 110 | 25 | 75x2,5x28 DIN5480 | 120 x 4mm |
| | 99.446.230 | | | | | - | | | | | - | | | | - | | - | (*) |
| | 99.446.231 | XS,3 | 150 | - | - | 112,1 | 4 | 18,5 | 13,1 | 87 | 270 | - | 130,0 | 170 | 60 | 25 | 75x2,5x28 DIN5480 | 120 x 4mm |
| 468 | 99.468.200 | | | | | - | | | | | - | | | | - | | - | (*) |
| | 99.468.201 | XS,3 | 180 | - | - | 98,1 | 4 | 17,5 | 15,1 | 87 | 348 | - | 150,0 | 170 | 110 | 22 | 80x2,5x30 DIN5480 | 110 x 6mm |
| | 99.468.202 | | | | | 130,1 | | | | | 370 | | | | 110 | | | 140 x 5mm |

E= NUMBER OF HOLES / LOCHANZAHL / DELİK SAYISI
ß= JOINT ANGLE / BEUGEWINKEL / MAFSAL AÇISI
O= SPIGIT DEPTH / ZENTRIERBOHRUNGTIEFE / SPİGOT DERİNLİĞİ
(*) WITHOUT TUBE SLEEVE-SLIPSTUB / OHNE KEILNABE- WELLENZAPFEN / TÜP KAYICI-KAYICI MIL HARIC

## AXLE SHAFTS / HINTERACHSWELLEN / AKS MİLLERİ



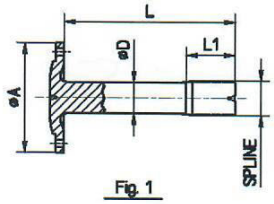


Fig. 1

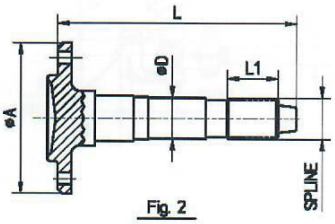


Fig. 2

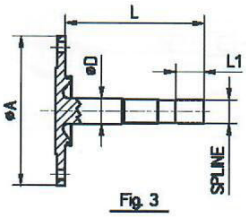


Fig. 3

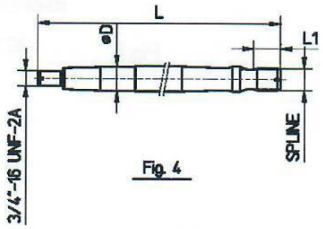


Fig. 4

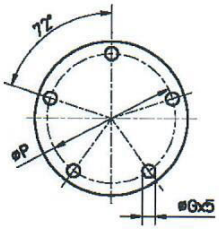


Fig. A

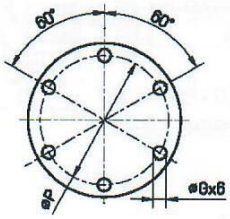


Fig. B

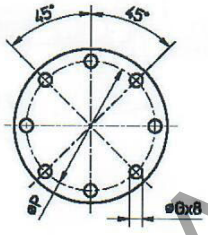


Fig. C

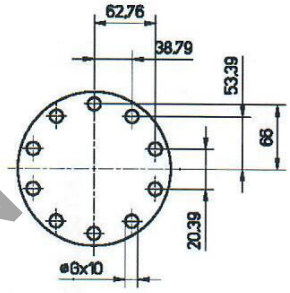


Fig. D

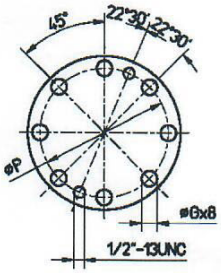


Fig. E

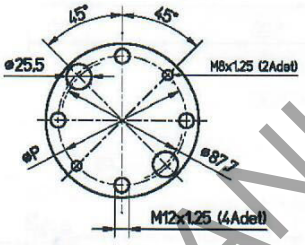


Fig. F

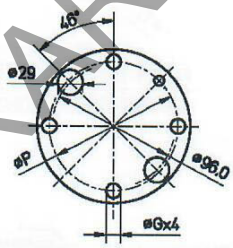


Fig. G

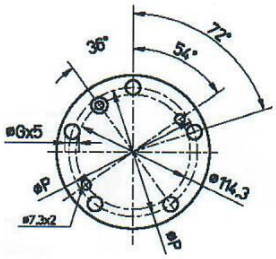


Fig. H



KAT-91

26/12/2008

| TEIL NR. PART NO. PARÇA NO. | REF. | FİG. | A | P | LOCHANZAHL x G NO.OF HOLES x G DELİK ADEDİ x G | D | L | SPLINE / ZAHN / KANAL INVOLUTE SPLINE DATA MAJ.DIA. | D.PITCH | MODUL | TEETH | P.ANG. | L1 LENGTH |
|---|---|---|---|---|---|---|---|---|---|---|---|---|---|
| 30009100100 | FIAT:4472221 | 2F | 122 | 98 | --- | 30 | 680 | 26,4 | 24/48 | - | 24 | 45° | 35 |
| 30009100200 | FORD:KST-4235-AA | 2G | 137 | 107,9 | 4 x 12,60÷12,75 | 35 | 740 | 24,5 | 24/48 | - | 22 | 45° | 41 |
| 30009100300 | FIAT:5924548 | 2F | 122 | 98 | --- | 30 | 668 | 26,4 | 24/48 | - | 24 | 45° | 35 |
| 30009100400 | CHRYSLER:16200T | 1C | 120 | 100,5 | 8 x 11,30÷11,43 | 30,2 | 870 | 32,7 | 24/48 | - | 30 | 30° | 46 |
| 30009100800 | UZEL:897039M1 | 2E | 190 | 152,4 | 8 x 15,95÷16,02 | 57,2 | 774 | 50,8 | 20/40 | - | 39 | 37,5° | 118 |
| 30009100900 | IVECO:4706212 | 1D | 152 | 132 | 10 x 10,4÷10,6 | 38 | 845 | 39,5 | - | 2,65 | 14 | 30° | 50 |
| 30009101001 | FORD:MCT-4235-BA | 1C | 210 | 177,8 | 8 x 19,36÷19,56 | 51 | 1099 | 53,4 | 20/40 | - | 41 | 37,5° | 76 |
| 30009101002 | FORD:MCT-4235-AA | 1C | 210 | 177,8 | 8 x 19,36÷19,56 | 51 | 972 | 53,4 | 20/40 | - | 41 | 37,5° | 76 |
| 30009101100 | FORD:2950 E-4235 E | 3A | 186 | 160 | 5 x 12,70÷12,78 | 33 | 804 | 27,4 | 24/48 | - | 25 | 45° | 40 |
| 30009101101 | FORD:90 PT-4235-AA | 3A | 186 | 160 | 5 x 12,70÷12,78 | 33 | 705 | 27,4 | 24/48 | - | 25 | 45° | 40 |
| 30009101200 | FORD:92VB-4235-GB | 3B | 140 | 103 | 6 x 12,2÷12,4 | 35 | 892 | 33,4 | 16/32 | - | 20 | 30° | 44 |
| 30009101300 | FORD:92VB-4235-CA | 3A | 186 | 160 | 5 x 12,70÷12,78 | 32 | 876 | 28,5 | 24/48 | - | 26 | 45° | 36 |
| 30009101301 | FORD:92PT-4235-AA | 3A | 186 | 160 | 5 x 12,70÷12,78 | 32 | 704 | 28,5 | 24/48 | - | 26 | 45° | 36 |
| 30009102000 | ISUZU:5.42171.029.0 | 1C | 138 | 116 | 8 x 11,6 (TAPER) | 38 | 810 | 41,4 | - | 2,0 | 19 | 20° | 51 |
| 30009102001 | ISUZU:8.94341.974.1 | 1C | 138 | 116 | 8 x 11,6 (TAPER) | 38 | 830 | 41,4 | - | 2,0 | 19 | 20° | 51 |
| 30009102100 | PEYKAN:11019113 | 4 | -- | -- | --- | 30 | 719 | 27,6 | 16/32 | - | 17 | 45° | 29 |
| 30009102602 | BMC:4M 54086 | 3B | 114 | 97 | 6 x 8,08÷8,23 | 33 | 832 | 29,6 | 24/48 | - | 27 | 45° | 50 |
| 30009103100 | PEYKAN:11018113 | 4 | -- | -- | --- | 30 | 719 | 24,3 | 24/48 | - | 22 | 45° | 29 |
| 30009103301 | M.B.: 10040427 | 1D | 152 | 132 | 10 x 12,75÷13,25 | 40 | 853 | 44,4 | 20/40 | - | 34 | 37,5° | 54 |

## STEERING COLUMNS / LENKWELLEN / DİREKSİYON ŞAFTLARI

Fig.1

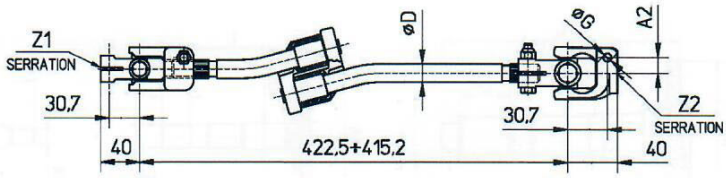


Fig.2

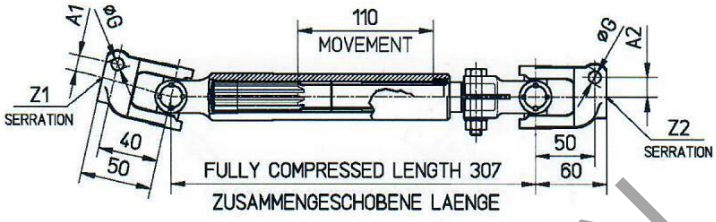


Fig.3

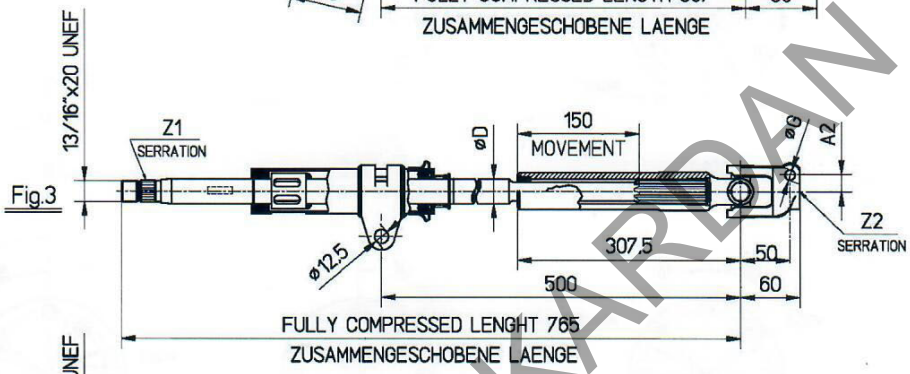


Fig.4

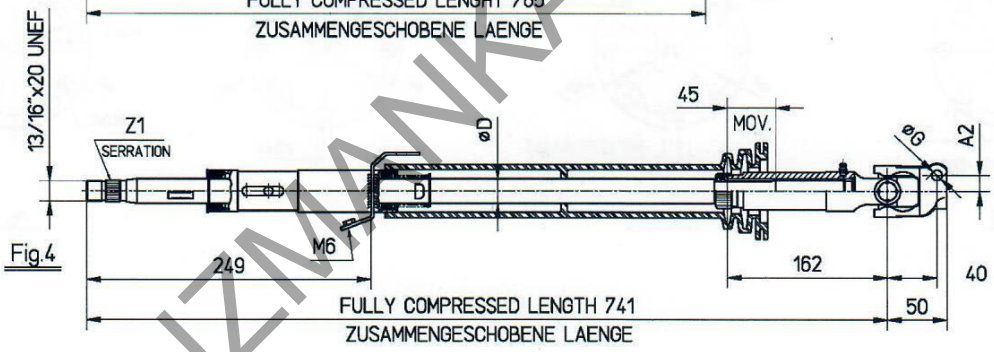


Fig.5

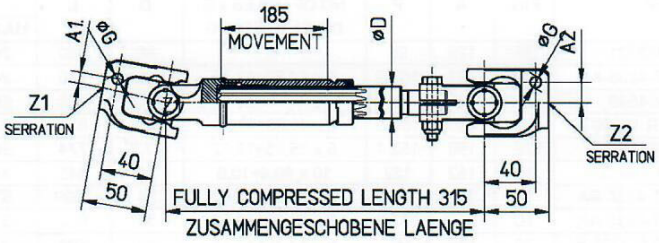


**KAT-92** **26/12/2008**

| SERIE BAUGR SERİ | PART NO. TEIL NR. PARÇA NO. | REF. | FIG. | A1 | A2 | Ø D | G | Z1 | Z2 |
|---|---|---|---|---|---|---|---|---|---|
| 020 | 50209202000 | LANDROVER: NRC 8398-L | 1 | 11,1 | 11,1 | 18,4 | 8,3 | 3/4" x 48 SERRATION | 3/4" x 48 SERRATION |
| 040 | 50409204400 | FORD : JCT-3C529-AA | 3 | - | 16,7 | 25,0 | 10,4 | 7/8" x 48 SERRATION | 1 x 79 ZGN715 SERR. |
| | 50409210000 90 | IVECO : 12977 | 2 | 13,2 | 16,7 | 19,1 | 10,4 | 1 x 54 ZGN715 SERR. | 1 x 79 ZGN715 SERR. |
| | 50409211100 | OTOKAR: 12A15-07006-AB | 4 | - | 13,3 | 25,0 | 10,4 | 7/8" x 48 SERRATION | 1 x 54 ZGN715 SERR. |
| | 50409211800 | M.B.: 371 460 70 11 | 5 | 12,3 | 13,5 | 25,0 | 8,4 | 1 x 54 ZGN715 SERR. | 1 x 66 N442 SERR. |

## DOUBLE JOINTS / DOPPELGELENK / ÇİFT MAFSALLAR



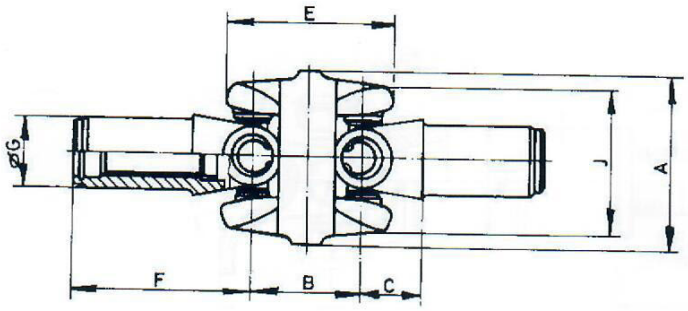


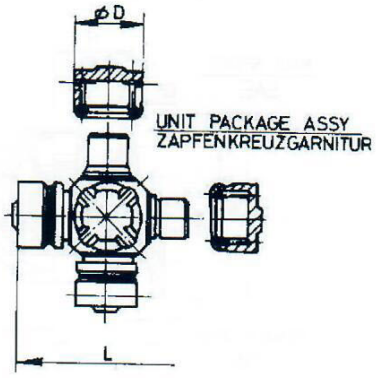


**KAT-96/1** **18/03/02**

| SERIE BAUGR SERİ | JOINT NO GELENK NR MAFSAL NO | REF. | FIG | Md MAX. (Nm) | A MAX. | B | C | E | F | G | J | ß° | DxL |
|---|---|---|---|---|---|---|---|---|---|---|---|---|---|
| 409 | 50009600100 | 7029 910 410 | 1 | 2200 | 111 | 70 | 41,5 | 111,5 | 100,5 | 46 | 90 | 50 | 30 x 83 |
| - | 50009600200 | 7029 910 210 | 1 | 1125 | 97 | 63 | 31,5 | 98 | 86,5 | 37 | 78 | 52 | 27 x 70 |

## DRIVE SHAFTS / KARDANGELENKE , DOPPELT / AKS MAFSALLARI

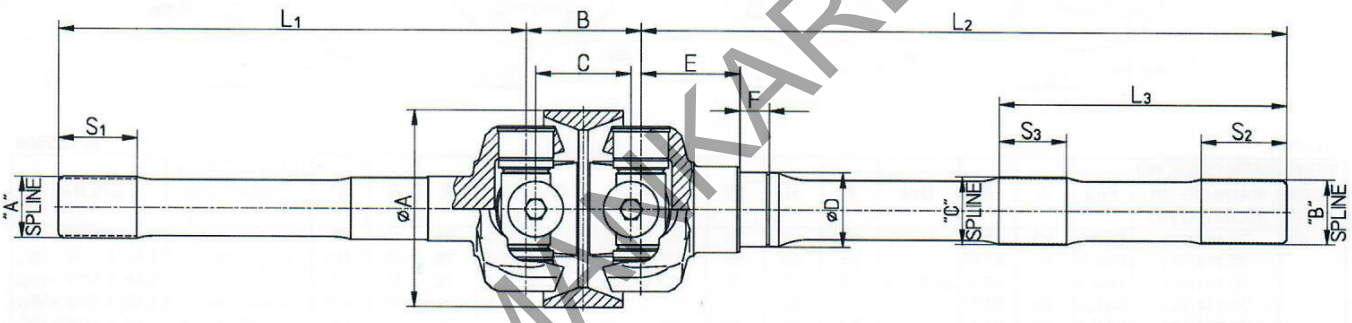


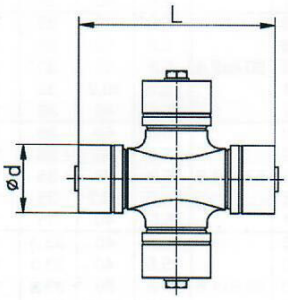


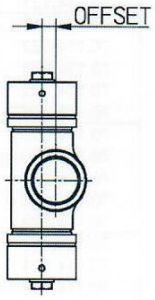


**KAT-96/2** **17/03/09**

| PART NO. TEIL NR. PARÇA NO. | ØA | B | C | ØD | E | F | ød | L | SPLINE / ZAHN / KANAL "A" | | | | | L1 | SPLINE / ZAHN / KANAL "B" | | | | | L2 | SPLINE / ZAHN / KANAL "C" | | | | | L3 |
|---|---|---|---|---|---|---|---|---|---|---|---|---|---|---|---|---|---|---|---|---|---|---|---|---|---|---|
| | | | | | | | | | MAJ.DIA. | MODUL | TEETH | P. ANG. | S1 | | MAJ.DIA. | MODUL | TEETH | P.ANG. | S2 | | MAJ.DIA. | MODUL | TEETH | P.ANG. | S3 | |
| 5.000.96.040.01 | 160 | 94 | 78 | 60 | 81 | 24 | 45 | 126 | 49,8 | 1,25 | 39 | 37°30" | 64 | 382 | 52,3 | 1,25 | 41 | 37°30" | 70 | 757 | 54,8 | 1,25 | 43 | 37°30" | 55 | 235 |
| 5.000.96.040.02 | 160 | 94 | 78 | 60 | 81 | 24 | 45 | 126 | 49,8 | 1,25 | 39 | 37°30" | 64 | 382 | 52,3 | 1,25 | 41 | 37°30" | 70 | 857 | 54,8 | 1,25 | 43 | 37°30" | 55 | 235 |
| 5.000.96.040.03 | 160 | 94 | 78 | 60 | 81 | 24 | 45 | 126 | 49,8 | 1,25 | 39 | 37°30" | 64 | 382 | 52,3 | 1,25 | 41 | 37°30" | 70 | 788 | 54,8 | 1,25 | 43 | 37°30" | 55 | 235 |
| 5.000.96.041.01 | 160 | 94 | 78 | 60 | 81 | 24 | 45 | 126 | 49,8 | 1,25 | 39 | 37°30" | 64 | 382 | 52,3 | 1,25 | 41 | 37°30" | 70 | 691 | - | - | - | - | - | - |
| 5.000.96.041.02 | 160 | 94 | 78 | 60 | 81 | 24 | 45 | 126 | 49,8 | 1,25 | 39 | 37°30" | 64 | 382 | 52,3 | 1,25 | 41 | 37°30" | 70 | 791 | - | - | - | - | - | - |
| 5.000.96.041.03 | 160 | 94 | 78 | 60 | 81 | 24 | 45 | 126 | 49,8 | 1,25 | 39 | 37°30" | 64 | 382 | 52,3 | 1,25 | 41 | 37°30" | 70 | 722 | - | - | - | - | - | - |
| 5.000.96.043.00 | 138 | 81 | 66 | 50 | 72,5 | 29 | 38 | 107,2 | 49,8 | 1,25 | 39 | 37°30" | 60 | 389,5 | 42,3 | 1,25 | 33 | 37°30" | 53 | 710 | 44,8 | 1,25 | 35 | 37°30" | 65 | 180 |
| 5.000.96.044.00 | 138 | 81 | 66 | 50 | 72,5 | 29 | 38 | 107,2 | 49,8 | 1,25 | 39 | 37°30" | 60 | 389,5 | 42,3 | 1,25 | 33 | 37°30" | 53 | 710 | - | - | - | - | - | - |

## DOUBLE JOINTS / DOPPELGELENK / ÇİFT MAFSALLAR



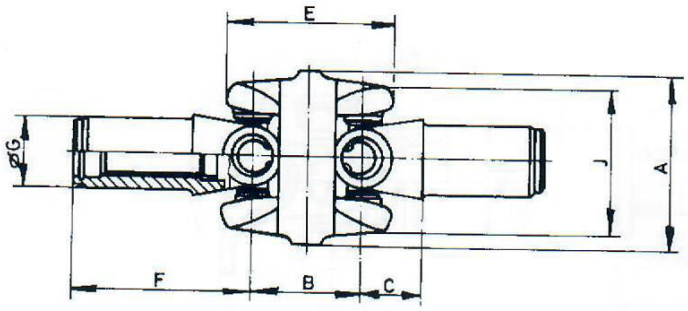


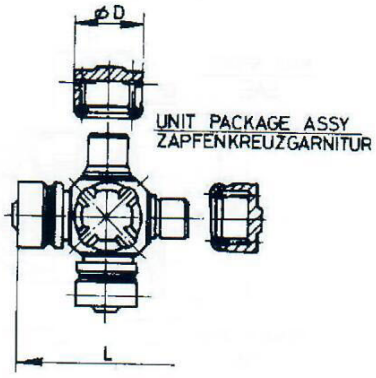


**KAT-96/1** **18/03/02**

| SERIE BAUGR SERİ | JOINT NO GELENK NR MAFSAL NO | REF. | FIG | Md MAX. (Nm) | A MAX. | B | C | E | F | G | J | ß° | DxL |
|---|---|---|---|---|---|---|---|---|---|---|---|---|---|
| 409 | 50009600100 | 7029 910 410 | 1 | 2200 | 111 | 70 | 41,5 | 111,5 | 100,5 | 46 | 90 | 50 | 30 x 83 |
| - | 50009600200 | 7029 910 210 | 1 | 1125 | 97 | 63 | 31,5 | 98 | 86,5 | 37 | 78 | 52 | 27 x 70 |

## DRIVE SHAFTS / KARDANGELENKE , DOPPELT / AKS MAFSALLARI

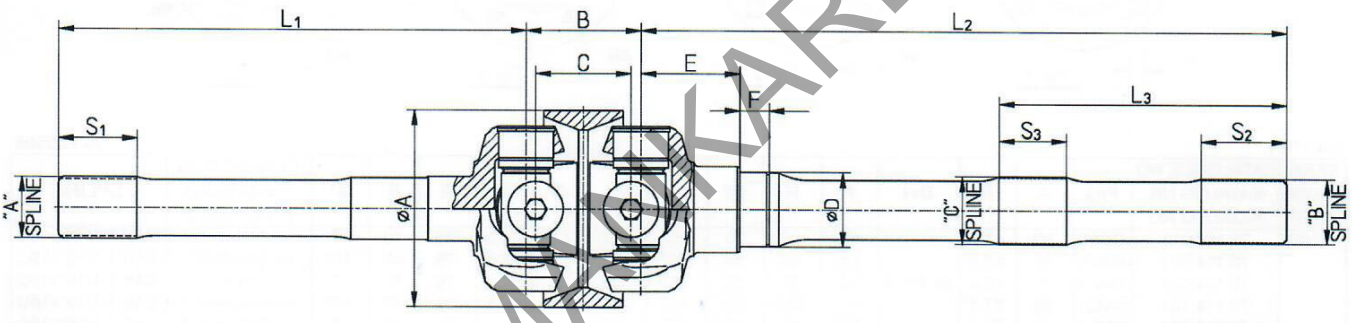


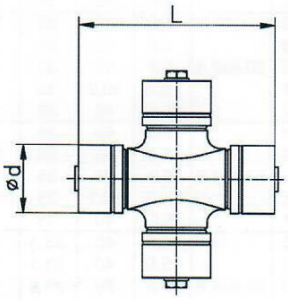


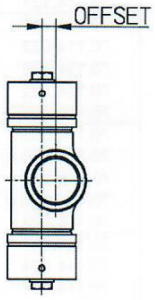


**KAT-96/2** **17/03/09**

| PART NO. TEIL NR. PARÇA NO. | ØA | B | C | ØD | E | F | ød | L | SPLINE / ZAHN / KANAL "A" | | | | | L1 | SPLINE / ZAHN / KANAL "B" | | | | | L2 | SPLINE / ZAHN / KANAL "C" | | | | | L3 |
|---|---|---|---|---|---|---|---|---|---|---|---|---|---|---|---|---|---|---|---|---|---|---|---|---|---|---|
| | | | | | | | | | MAJ.DIA. | MODUL | TEETH | P. ANG. | S1 | | MAJ.DIA. | MODUL | TEETH | P.ANG. | S2 | | MAJ.DIA. | MODUL | TEETH | P.ANG. | S3 | |
| 5.000.96.040.01 | 160 | 94 | 78 | 60 | 81 | 24 | 45 | 126 | 49,8 | 1,25 | 39 | 37°30" | 64 | 382 | 52,3 | 1,25 | 41 | 37°30" | 70 | 757 | 54,8 | 1,25 | 43 | 37°30" | 55 | 235 |
| 5.000.96.040.02 | 160 | 94 | 78 | 60 | 81 | 24 | 45 | 126 | 49,8 | 1,25 | 39 | 37°30" | 64 | 382 | 52,3 | 1,25 | 41 | 37°30" | 70 | 857 | 54,8 | 1,25 | 43 | 37°30" | 55 | 235 |
| 5.000.96.040.03 | 160 | 94 | 78 | 60 | 81 | 24 | 45 | 126 | 49,8 | 1,25 | 39 | 37°30" | 64 | 382 | 52,3 | 1,25 | 41 | 37°30" | 70 | 788 | 54,8 | 1,25 | 43 | 37°30" | 55 | 235 |
| 5.000.96.041.01 | 160 | 94 | 78 | 60 | 81 | 24 | 45 | 126 | 49,8 | 1,25 | 39 | 37°30" | 64 | 382 | 52,3 | 1,25 | 41 | 37°30" | 70 | 691 | - | - | - | - | - | - |
| 5.000.96.041.02 | 160 | 94 | 78 | 60 | 81 | 24 | 45 | 126 | 49,8 | 1,25 | 39 | 37°30" | 64 | 382 | 52,3 | 1,25 | 41 | 37°30" | 70 | 791 | - | - | - | - | - | - |
| 5.000.96.041.03 | 160 | 94 | 78 | 60 | 81 | 24 | 45 | 126 | 49,8 | 1,25 | 39 | 37°30" | 64 | 382 | 52,3 | 1,25 | 41 | 37°30" | 70 | 722 | - | - | - | - | - | - |
| 5.000.96.043.00 | 138 | 81 | 66 | 50 | 72,5 | 29 | 38 | 107,2 | 49,8 | 1,25 | 39 | 37°30" | 60 | 389,5 | 42,3 | 1,25 | 33 | 37°30" | 53 | 710 | 44,8 | 1,25 | 35 | 37°30" | 65 | 180 |
| 5.000.96.044.00 | 138 | 81 | 66 | 50 | 72,5 | 29 | 38 | 107,2 | 49,8 | 1,25 | 39 | 37°30" | 60 | 389,5 | 42,3 | 1,25 | 33 | 37°30" | 53 | 710 | - | - | - | - | - | - |

# PROPELLER SHAFTS WITH SLIDING MOVEMENT
# GELENKWELLEN MIT LAENGENAUSGLEICH / KAYICILI ARKA ŞAFTLAR



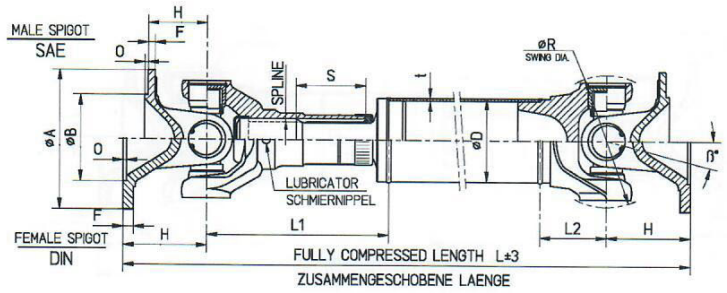


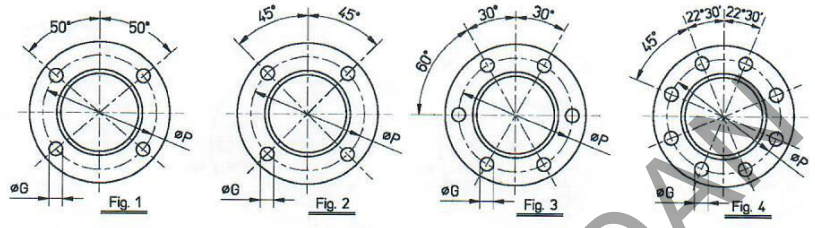


**KAT-70/2**

**30/12/2008**

| SERIE BAUGR SERİ | CATALOGUE NO KATALOG NR KATALOG NO | FIG | A | B | Dxt | F | H | L2 | L1 | L MIN | O | P | R | S | ß° | CONNECTION ANSCHLUSS A,TYPExExG | SPLINE |
|---|---|---|---|---|---|---|---|---|---|---|---|---|---|---|---|---|---|
| | 70.131.010 | DIN,2 | 90 | 47,0 | | 6,7 | 50 | 42,9 | 153 | 347 | 2,5 | 74,5 | 97 | 55 | 20° | 90 DINx4x8,1 | SAE 1 3/8"x16C |
| | 70.131.020 | DIN,3 | 90 | 47,0 | | 6,7 | 50 | 42,9 | 153 | 347 | 2,5 | 74,5 | 97 | 55 | 20° | 90 DINx6x10,2 | SAE 1 3/8"x16C |
| | 70.131.030 | DIN,3 | 90 | 47,0 | | 6,8 | 50 | 42,9 | 153 | 347 | 2,5 | 74,5 | 97 | 55 | 20° | 90 DINx6x8,1 | SAE 1 3/8"x16C |
| | 70.131.040 | DIN,2 | 100 | 57,0 | | 6,7 | 53 | 42,9 | 153 | 353 | 2,5 | 84,0 | 97 | 55 | 20° | 100 DINx4x8,1 | SAE 1 3/8"x16C |
| | 70.131.050 | DIN,3 | 100 | 57,0 | | 6,7 | 53 | 42,9 | 153 | 353 | 2,5 | 84,0 | 97 | 55 | 20° | 100 DINx6x8,1 | SAE 1 3/8"x16C |
| | 70.131.060 | DIN,4 | 120 | 75,0 | 50,8x2,4 | 8,0 | 52 | 42,9 | 153 | 351 | 2,5 | 101,5 | 97 | 55 | 20° | 120 DINx8x10,2 | SAE 1 3/8"x16C |
| | 70.131.100 | SAE,1 | 92 | 57,1 | | 6,7 | 35 | 42,9 | 153 | 317 | 1,4 | 76,2 | 97 | 55 | 20° | 92 SAEx4x9,7 | SAE 1 3/8"x16C |
| | 70.131.110 | SAE,1 | 97 | 60,3 | | 6,7 | 35 | 42,9 | 153 | 317 | 1,4 | 79,4 | 97 | 55 | 20° | 97 SAEx4x9,7 | SAE 1 3/8"x16C |
| | 70.131.120 | SAE,1 | 97 | 60,3 | | 6,7 | 35 | 42,9 | 153 | 317 | 1,4 | 79,4 | 97 | 55 | 20° | 97 SAEx4x10,2 | SAE 1 3/8"x16C |
| | 70.131.130 | SAE,1 | 114 | 69,8 | | 8,2 | 35 | 42,9 | 153 | 317 | 1,4 | 95,3 | 97 | 55 | 20° | 114 SAEx4x11,3 | SAE 1 3/8"x16C |
| | 70.131.140 | SAE,1 | 114 | 69,8 | | 8,2 | 35 | 42,9 | 153 | 317 | 1,4 | 95,3 | 97 | 55 | 20° | 114 SAEx4x12,2 | SAE 1 3/8"x16C |
| | 70.131.011 | DIN,2 | 90 | 47,0 | | 6,7 | 50 | 42,9 | 153 | 347 | 2,5 | 74,5 | 97 | 55 | 20° | 90 DINx4x8,1 | SAE 1 3/8"x16C |
| | 70.131.021 | DIN,3 | 90 | 47,0 | | 6,7 | 50 | 42,9 | 153 | 347 | 2,5 | 74,5 | 97 | 55 | 20° | 90 DINx6x10,2 | SAE 1 3/8"x16C |
| | 70.131.031 | DIN,3 | 90 | 47,0 | | 6,8 | 50 | 42,9 | 153 | 347 | 2,5 | 74,5 | 97 | 55 | 20° | 90 DINx6x8,1 | SAE 1 3/8"x16C |
| | 70.131.041 | DIN,2 | 100 | 57,0 | | 6,7 | 53 | 42,9 | 153 | 353 | 2,5 | 84,0 | 97 | 55 | 20° | 100 DINx4x8,1 | SAE 1 3/8"x16C |
| | 70.131.051 | DIN,3 | 100 | 57,0 | | 6,7 | 53 | 42,9 | 153 | 353 | 2,5 | 84,0 | 97 | 55 | 20° | 100 DINx6x8,1 | SAE 1 3/8"x16C |
| | 70.131.061 | DIN,4 | 120 | 75,0 | 63,5x1,6 | 8,0 | 52 | 42,9 | 153 | 351 | 2,5 | 101,5 | 97 | 55 | 20° | 120 DINx8x10,2 | SAE 1 3/8"x16C |
| | 70.131.101 | SAE,1 | 92 | 57,1 | | 6,7 | 35 | 42,9 | 153 | 317 | 1,4 | 76,2 | 97 | 55 | 20° | 92 SAEx4x9,7 | SAE 1 3/8"x16C |
| | 70.131.111 | SAE,1 | 97 | 60,3 | | 6,7 | 35 | 42,9 | 153 | 317 | 1,4 | 79,4 | 97 | 55 | 20° | 97 SAEx4x9,7 | SAE 1 3/8"x16C |
| | 70.131.121 | SAE,1 | 97 | 60,3 | | 6,7 | 35 | 42,9 | 153 | 317 | 1,4 | 79,4 | 97 | 55 | 20° | 97 SAEx4x10,2 | SAE 1 3/8"x16C |
| | 70.131.131 | SAE,1 | 114 | 69,8 | | 8,2 | 35 | 42,9 | 153 | 317 | 1,4 | 95,3 | 97 | 55 | 20° | 114 SAEx4x11,3 | SAE 1 3/8"x16C |
| 1310 | 70.131.141 | SAE,1 | 114 | 69,8 | | 8,2 | 35 | 42,9 | 153 | 317 | 1,4 | 95,3 | 97 | 55 | 20° | 114 SAEx4x12,2 | SAE 1 3/8"x16C |
| | 70.131.012 | DIN,2 | 90 | 47,0 | | 6,7 | 50 | 42,9 | 153 | 347 | 2,5 | 74,5 | 97 | 55 | 20° | 90 DINx4x8,1 | SAE 1 3/8"x16C |
| | 70.131.022 | DIN,3 | 90 | 47,0 | | 6,7 | 50 | 42,9 | 153 | 347 | 2,5 | 74,5 | 97 | 55 | 20° | 90 DINx6x10,2 | SAE 1 3/8"x16C |
| | 70.131.032 | DIN,3 | 90 | 47,0 | | 6,8 | 50 | 42,9 | 153 | 347 | 2,5 | 74,5 | 97 | 55 | 20° | 90 DINx6x8,1 | SAE 1 3/8"x16C |
| | 70.131.042 | DIN,2 | 100 | 57,0 | | 6,7 | 53 | 42,9 | 153 | 353 | 2,5 | 84,0 | 97 | 55 | 20° | 100 DINx4x8,1 | SAE 1 3/8"x16C |
| | 70.131.052 | DIN,3 | 100 | 57,0 | | 6,7 | 53 | 42,9 | 153 | 353 | 2,5 | 84,0 | 97 | 55 | 20° | 100 DINx6x8,1 | SAE 1 3/8"x16C |
| | 70.131.062 | DIN,4 | 120 | 75,0 | 76,2x1,6 | 8,0 | 52 | 42,9 | 153 | 351 | 2,5 | 101,5 | 97 | 55 | 20° | 120 DINx8x10,2 | SAE 1 3/8"x16C |
| | 70.131.102 | SAE,1 | 92 | 57,1 | | 6,7 | 35 | 42,9 | 153 | 317 | 1,4 | 76,2 | 97 | 55 | 20° | 92 SAEx4x9,7 | SAE 1 3/8"x16C |
| | 70.131.112 | SAE,1 | 97 | 60,3 | | 6,7 | 35 | 42,9 | 153 | 317 | 1,4 | 79,4 | 97 | 55 | 20° | 97 SAEx4x9,7 | SAE 1 3/8"x16C |
| | 70.131.122 | SAE,1 | 97 | 60,3 | | 6,7 | 35 | 42,9 | 153 | 317 | 1,4 | 79,4 | 97 | 55 | 20° | 97 SAEx4x10,2 | SAE 1 3/8"x16C |
| | 70.131.132 | SAE,1 | 114 | 69,8 | | 8,2 | 35 | 42,9 | 153 | 317 | 1,4 | 95,3 | 97 | 55 | 20° | 114 SAEx4x11,3 | SAE 1 3/8"x16C |
| | 70.131.142 | SAE,1 | 114 | 69,8 | | 8,2 | 35 | 42,9 | 153 | 317 | 1,4 | 95,3 | 97 | 55 | 20° | 114 SAEx4x12,2 | SAE 1 3/8"x16C |
| | 70.131.013 | DIN,2 | 90 | 47,0 | | 6,7 | 50 | 42,9 | 153 | 347 | 2,5 | 74,5 | 97 | 55 | 20° | 90 DINx4x8,1 | SAE 1 3/8"x16C |
| | 70.131.023 | DIN,3 | 90 | 47,0 | | 6,7 | 50 | 42,9 | 153 | 347 | 2,5 | 74,5 | 97 | 55 | 20° | 90 DINx6x10,2 | SAE 1 3/8"x16C |
| | 70.131.033 | DIN,3 | 90 | 47,0 | | 6,8 | 50 | 42,9 | 153 | 347 | 2,5 | 74,5 | 97 | 55 | 20° | 90 DINx6x8,1 | SAE 1 3/8"x16C |
| | 70.131.043 | DIN,2 | 100 | 57,0 | | 6,7 | 53 | 42,9 | 153 | 353 | 2,5 | 84,0 | 97 | 55 | 20° | 100 DINx4x8,1 | SAE 1 3/8"x16C |
| | 70.131.053 | DIN,3 | 100 | 57,0 | | 6,7 | 53 | 42,9 | 153 | 353 | 2,5 | 84,0 | 97 | 55 | 20° | 100 DINx6x8,1 | SAE 1 3/8"x16C |
| | 70.131.063 | DIN,4 | 120 | 75,0 | 76,2x2,4 | 8,0 | 52 | 42,9 | 153 | 351 | 2,5 | 101,5 | 97 | 55 | 20° | 120 DINx8x10,2 | SAE 1 3/8"x16C |
| | 70.131.103 | SAE,1 | 92 | 57,1 | | 6,7 | 35 | 42,9 | 153 | 317 | 1,4 | 76,2 | 97 | 55 | 20° | 92 SAEx4x9,7 | SAE 1 3/8"x16C |
| | 70.131.113 | SAE,1 | 97 | 60,3 | | 6,7 | 35 | 42,9 | 153 | 317 | 1,4 | 79,4 | 97 | 55 | 20° | 97 SAEx4x9,7 | SAE 1 3/8"x16C |
| | 70.131.123 | SAE,1 | 97 | 60,3 | | 6,7 | 35 | 42,9 | 153 | 317 | 1,4 | 79,4 | 97 | 55 | 20° | 97 SAEx4x10,2 | SAE 1 3/8"x16C |
| | 70.131.133 | SAE,1 | 114 | 69,8 | | 8,2 | 35 | 42,9 | 153 | 317 | 1,4 | 95,3 | 97 | 55 | 20° | 114 SAEx4x11,3 | SAE 1 3/8"x16C |
| | 70.131.143 | SAE,1 | 114 | 69,8 | | 8,2 | 35 | 42,9 | 153 | 317 | 1,4 | 95,3 | 97 | 55 | 20° | 114 SAEx4x12,2 | SAE 1 3/8"x16C |

E= NUMBER OF HOLES / LOCHANZAHL / DELİK SAYISI
ß= JOINT ANGLE / BEUGEWINKEL / MAFSAL AÇISI
O= SPIGIT DEPTH / ZENTRIERBOHRUNGTIEFE / SPİGOT DERİNLİĞİ
(*) SLIP STUB RILSAN COATED / WELLENZAPFEN RILSAN BESCHICHTET / KAYICI MIL RILSAN KAPLI

# PROPELLER SHAFTS WITH SLIDING MOVEMENT
# GELENKWELLEN MIT LAENGENAUSGLEICH / KAYICILI ARKA ŞAFTLAR

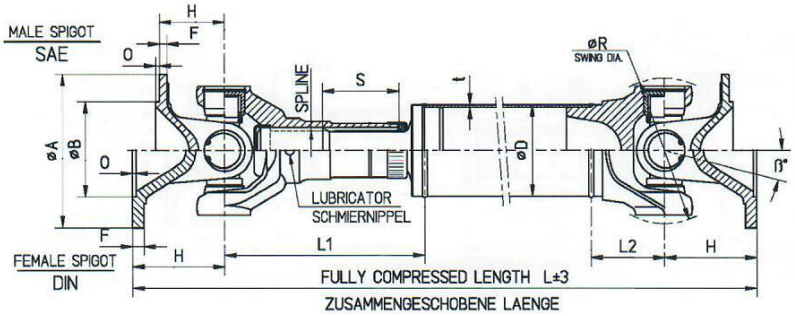


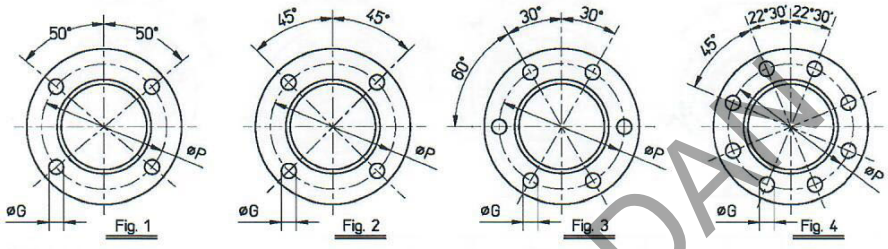


**KAT-70/3** **30/12/2008**

| SERIE BAUGR SERİ | CATALOGUE NO KATALOG NR KATALOG NO | FIG | A | B | Dxt | F | H | L2 | L1 | L MIN | O | P | R | S | ß° | CONNECTION ANSCHLUSS A,TYPExExG | SPLINE |
|---|---|---|---|---|---|---|---|---|---|---|---|---|---|---|---|---|---|
| | 70.131.200 | DIN,2 | 90 | 47,0 | | 6,7 | 50 | 47 | 182 | 367 | 2,5 | 74,5 | 97 | 70 | 20° | 90 DINx4x8,1 | SAE 1 3/8"x16C |
| | 70.131.210 | DIN,3 | 90 | 47,0 | | 6,7 | 50 | 47 | 182 | 367 | 2,5 | 74,5 | 97 | 70 | 20° | 90 DINx6x10,2 | SAE 1 3/8"x16C |
| | 70.131.220 | DIN,3 | 90 | 56,0 | | 6,8 | 50 | 47 | 182 | 367 | 2,5 | 74,5 | 97 | 70 | 20° | 90 DINx6x8,1 | SAE 1 3/8"x16C |
| | 70.131.230 | DIN,2 | 100 | 57,0 | | 6,7 | 53 | 47 | 182 | 370 | 2,5 | 84,0 | 97 | 70 | 20° | 100 DINx4x8,1 | SAE 1 3/8"x16C |
| | 70.131.240 | DIN,3 | 100 | 57,0 | | 6,7 | 53 | 47 | 182 | 370 | 2,5 | 84,0 | 97 | 70 | 30° | 100 DINx6x8,1 | SAE 1 3/8"x16C |
| | 70.131.250 | DIN,4 | 120 | 75,0 | 63,5x1,6 | 8,0 | 52 | 47 | 182 | 370 | 2,5 | 101,5 | 97 | 70 | 20° | 120 DINx8x10,2 | SAE 1 3/8"x16C |
| | 70.131.300 | SAE,1 | 92 | 57,1 | | 6,7 | 35 | 47 | 182 | 352 | 1,4 | 76,2 | 97 | 70 | 20° | 92 SAEx4x9,7 | SAE 1 3/8"x16C |
| | 70.131.310 | SAE,1 | 97 | 60,3 | | 6,7 | 35 | 47 | 182 | 352 | 1,4 | 79,3 | 97 | 70 | 20° | 97 SAEx4x9,7 | SAE 1 3/8"x16C |
| | 70.131.320 | SAE,1 | 97 | 60,3 | | 6,7 | 35 | 47 | 182 | 352 | 1,4 | 76,3 | 97 | 70 | 20° | 97 SAEx4x10,2 | SAE 1 3/8"x16C |
| | 70.131.330 | SAE,1 | 114 | 69,8 | | 8,2 | 35 | 47 | 182 | 352 | 1,4 | 95,3 | 97 | 70 | 20° | 114 SAEx4x11,3 | SAE 1 3/8"x16C |
| | 70.131.340 | SAE,1 | 114,5 | 69,8 | | 8,2 | 35 | 47 | 182 | 352 | 1,4 | 95,3 | 97 | 70 | 20° | 114 SAEx4x12,2 | SAE 1 3/8"x16C |
| | 70.131.201 | DIN,2 | 90 | 47,0 | | 6,7 | 50 | 47 | 182 | 367 | 2,5 | 74,5 | 97 | 70 | 20° | 90 DINx4x8,1 | SAE 1 3/8"x16C |
| | 70.131.211 | DIN,3 | 90 | 47,0 | | 6,7 | 50 | 47 | 182 | 367 | 2,5 | 74,5 | 97 | 70 | 20° | 90 DINx6x10,2 | SAE 1 3/8"x16C |
| | 70.131.221 | DIN,3 | 90 | 56,0 | | 6,8 | 50 | 47 | 182 | 367 | 2,5 | 74,5 | 97 | 70 | 20° | 90 DINx6x8,1 | SAE 1 3/8"x16C |
| | 70.131.231 | DIN,2 | 100 | 57,0 | | 6,7 | 53 | 47 | 182 | 370 | 2,5 | 84,0 | 97 | 70 | 20° | 100 DINx4x8,1 | SAE 1 3/8"x16C |
| | 70.131.241 | DIN,3 | 100 | 57,0 | | 6,7 | 53 | 47 | 182 | 370 | 2,5 | 84,0 | 97 | 70 | 30° | 100 DINx6x8,1 | SAE 1 3/8"x16C |
| | 70.131.251 | DIN,4 | 120 | 75,0 | 50,8x2,4 | 8,0 | 52 | 47 | 182 | 370 | 2,5 | 101,5 | 97 | 70 | 20° | 120 DINx8x10,2 | SAE 1 3/8"x16C |
| | 70.131.301 | SAE,1 | 92 | 57,1 | | 6,7 | 35 | 47 | 182 | 352 | 1,4 | 76,2 | 97 | 70 | 20° | 92 SAEx4x9,7 | SAE 1 3/8"x16C |
| | 70.131.311 | SAE,1 | 97 | 60,3 | | 6,7 | 35 | 47 | 182 | 352 | 1,4 | 79,3 | 97 | 70 | 20° | 97 SAEx4x9,7 | SAE 1 3/8"x16C |
| | 70.131.321 | SAE,1 | 97 | 60,3 | | 6,7 | 35 | 47 | 182 | 352 | 1,4 | 76,3 | 97 | 70 | 20° | 97 SAEx4x10,2 | SAE 1 3/8"x16C |
| | 70.131.331 | SAE,1 | 114 | 69,8 | | 8,2 | 35 | 47 | 182 | 352 | 1,4 | 95,3 | 97 | 70 | 20° | 114 SAEx4x11,3 | SAE 1 3/8"x16C |
| 1310 | 70.131.341 | SAE,1 | 114,5 | 69,8 | | 8,2 | 35 | 47 | 182 | 352 | 1,4 | 95,3 | 97 | 70 | 20° | 114 SAEx4x12,2 | SAE 1 3/8"x16C |
| | 70.131.202 | DIN,2 | 90 | 47,0 | | 6,7 | 50 | 47 | 182 | 367 | 2,5 | 74,5 | 97 | 70 | 20° | 90 DINx4x8,1 | SAE 1 3/8"x16C |
| | 70.131.212 | DIN,3 | 90 | 47,0 | | 6,7 | 50 | 47 | 182 | 367 | 2,5 | 74,5 | 97 | 70 | 20° | 90 DINx6x10,2 | SAE 1 3/8"x16C |
| | 70.131.222 | DIN,3 | 90 | 56,0 | | 6,8 | 50 | 47 | 182 | 367 | 2,5 | 74,5 | 97 | 70 | 20° | 90 DINx6x8,1 | SAE 1 3/8"x16C |
| | 70.131.232 | DIN,2 | 100 | 57,0 | | 6,7 | 53 | 47 | 182 | 370 | 2,5 | 84,0 | 97 | 70 | 20° | 100 DINx4x8,1 | SAE 1 3/8"x16C |
| | 70.131.242 | DIN,3 | 100 | 57,0 | | 6,7 | 53 | 47 | 182 | 370 | 2,5 | 84,0 | 97 | 70 | 30° | 100 DINx6x8,1 | SAE 1 3/8"x16C |
| | 70.131.252 | DIN,4 | 120 | 75,0 | 76,2x1,6 | 8,0 | 52 | 47 | 182 | 370 | 2,5 | 101,5 | 97 | 70 | 20° | 120 DINx8x10,2 | SAE 1 3/8"x16C |
| | 70.131.302 | SAE,1 | 92 | 57,1 | | 6,7 | 35 | 47 | 182 | 352 | 1,4 | 76,2 | 97 | 70 | 20° | 92 SAEx4x9,7 | SAE 1 3/8"x16C |
| | 70.131.312 | SAE,1 | 97 | 60,3 | | 6,7 | 35 | 47 | 182 | 352 | 1,4 | 79,3 | 97 | 70 | 20° | 97 SAEx4x9,7 | SAE 1 3/8"x16C |
| | 70.131.322 | SAE,1 | 97 | 60,3 | | 6,7 | 35 | 47 | 182 | 352 | 1,4 | 76,3 | 97 | 70 | 20° | 97 SAEx4x10,2 | SAE 1 3/8"x16C |
| | 70.131.332 | SAE,1 | 114 | 69,8 | | 8,2 | 35 | 47 | 182 | 352 | 1,4 | 95,3 | 97 | 70 | 20° | 114 SAEx4x11,3 | SAE 1 3/8"x16C |
| | 70.131.342 | SAE,1 | 114,5 | 69,8 | | 8,2 | 35 | 47 | 182 | 352 | 1,4 | 95,3 | 97 | 70 | 20° | 114 SAEx4x12,2 | SAE 1 3/8"x16C |
| | 70.131.203 | DIN,2 | 90 | 47,0 | | 6,7 | 50 | 47 | 182 | 367 | 2,5 | 74,5 | 97 | 70 | 20° | 90 DINx4x8,1 | SAE 1 3/8"x16C |
| | 70.131.213 | DIN,3 | 90 | 47,0 | | 6,7 | 50 | 47 | 182 | 367 | 2,5 | 74,5 | 97 | 70 | 20° | 90 DINx6x10,2 | SAE 1 3/8"x16C |
| | 70.131.223 | DIN,3 | 90 | 56,0 | | 6,8 | 50 | 47 | 182 | 367 | 2,5 | 74,5 | 97 | 70 | 20° | 90 DINx6x8,1 | SAE 1 3/8"x16C |
| | 70.131.233 | DIN,2 | 100 | 57,0 | | 6,7 | 53 | 47 | 182 | 370 | 2,5 | 84,0 | 97 | 70 | 20° | 100 DINx4x8,1 | SAE 1 3/8"x16C |
| | 70.131.243 | DIN,3 | 100 | 57,0 | | 6,7 | 53 | 47 | 182 | 370 | 2,5 | 84,0 | 97 | 70 | 30° | 100 DINx6x8,1 | SAE 1 3/8"x16C |
| | 70.131.253 | DIN,4 | 120 | 75,0 | 76,2x2,4 | 8,0 | 52 | 47 | 182 | 370 | 2,5 | 101,5 | 97 | 70 | 20° | 120 DINx8x10,2 | SAE 1 3/8"x16C |
| | 70.131.303 | SAE,1 | 92 | 57,1 | | 6,7 | 35 | 47 | 182 | 352 | 1,4 | 76,2 | 97 | 70 | 20° | 92 SAEx4x9,7 | SAE 1 3/8"x16C |
| | 70.131.313 | SAE,1 | 97 | 60,3 | | 6,7 | 35 | 47 | 182 | 352 | 1,4 | 79,3 | 97 | 70 | 20° | 97 SAEx4x9,7 | SAE 1 3/8"x16C |
| | 70.131.323 | SAE,1 | 97 | 60,3 | | 6,7 | 35 | 47 | 182 | 352 | 1,4 | 76,3 | 97 | 70 | 20° | 97 SAEx4x10,2 | SAE 1 3/8"x16C |
| | 70.131.333 | SAE,1 | 114 | 69,8 | | 8,2 | 35 | 47 | 182 | 352 | 1,4 | 95,3 | 97 | 70 | 20° | 114 SAEx4x11,3 | SAE 1 3/8"x16C |
| | 70.131.343 | SAE,1 | 114,5 | 69,8 | | 8,2 | 35 | 47 | 182 | 352 | 1,4 | 95,3 | 97 | 70 | 20° | 114 SAEx4x12,2 | SAE 1 3/8"x16C |

E= NUMBER OF HOLES / LOCHANZAHL / DELİK SAYISI
O= SPIGIT DEPTH / ZENTRIERBOHRUNGTIEFE / SPİGOT DERİNLİĞİ
ß= JOINT ANGLE / BEUGEWINKEL / MAFSAL AÇISI
(*) SLIP STUB RILSAN COATED / WELLENZAPFEN RILSAN BESCHICHTET / KAYICI MIL RILSAN KAPLI

# PROPELLER SHAFTS WITH SLIDING MOVEMENT
# GELENKWELLEN MIT LAENGENAUSGLEICH / KAYICILI ARKA ŞAFTLAR



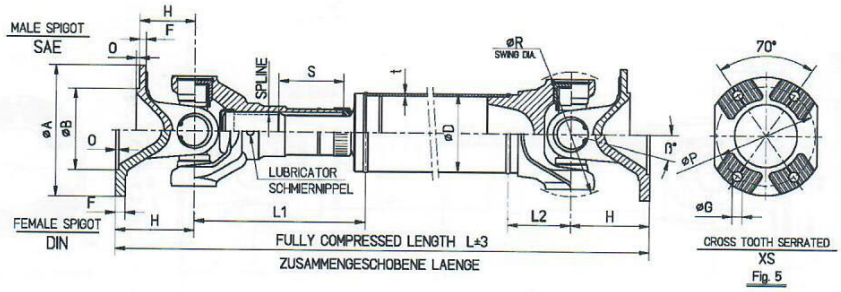


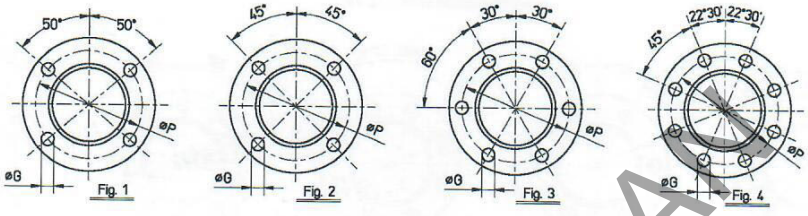


KAT-70/4

30/12/2008

| SERIE BAUGR SERİ | CATALOGUE NO KATALOG NR KATALOG NO | FIG | A | B | Dxt | F | H | L2 | L1 | L MIN | O | P | R | S | ß° | CONNECTION ANSCHLUSS A,TYPExExG | SPLINE |
|---|---|---|---|---|---|---|---|---|---|---|---|---|---|---|---|---|---|
| 1410 | 70.141.200 | DIN,4 | 120 | 75,0 | 76,2x2,4 | 8,0 | 56 | 54 | 186 | 387 | 3,0 | 101,5 | 122 | 70 | 20° | 120 DINx8x10,2 | SAE 1 1/2"x16C * |
| | 70.141.210 | DIN,4 | 120 | 75,0 | | 8,0 | 56 | 54 | 186 | 387 | 3,0 | 101,5 | 122 | 70 | 20° | 120 DINx8x8,1 | SAE 1 1/2"x16C * |
| | 70.141.220 | SAE,1 | 114 | 69,8 | | 7,5 | 42,9 | 54 | 186 | 361 | 1,4 | 95,3 | 122 | 70 | 20° | 114 SAEx4x11,3 | SAE 1 1/2"x16C * |
| | 70.141.230 | SAE,1 | 114 | 69,8 | | 7,5 | 42,9 | 54 | 186 | 361 | 1,4 | 95,3 | 122 | 70 | 20° | 114 SAEx4x12,2 | SAE 1 1/2"x16C * |
| | 70.141.240 | SAE,1 | 146 | 95,2 | | 11,5 | 50,8 | 54 | 186 | 366 | 1,5 | 120,6 | 122 | 70 | 20° | 146 SAEx4x12,9 | SAE 1 1/2"x16C * |
| | 70.141.250 | SAE,1 | 146 | 95,2 | | 11,5 | 50,8 | 54 | 186 | 366 | 1,5 | 120,6 | 122 | 70 | 20° | 146 SAEx4x14,2 | SAE 1 1/2"x16C * |
| | 70.141.300 | DIN,4 | 120 | 75,0 | 76,2x2,4 | 8,0 | 56 | 54 | 186 | 387 | 3,0 | 101,5 | 122 | 90 | 20° | 120 DINx8x10,2 | SAE 1 1/2"x16C * |
| | 70.141.310 | DIN,4 | 120 | 75,0 | | 8,0 | 56 | 54 | 186 | 387 | 3,0 | 101,5 | 122 | 90 | 20° | 120 DINx8x8,1 | SAE 1 1/2"x16C * |
| | 70.141.320 | SAE,1 | 114 | 69,8 | | 7,5 | 42,9 | 54 | 186 | 361 | 1,4 | 95,3 | 122 | 90 | 20° | 114 SAEx4x11,3 | SAE 1 1/2"x16C * |
| | 70.141.330 | SAE,1 | 114 | 69,8 | | 7,5 | 42,9 | 54 | 186 | 361 | 1,4 | 95,3 | 122 | 90 | 20° | 114 SAEx4x12,2 | SAE 1 1/2"x16C * |
| | 70.141.340 | SAE,1 | 146 | 95,2 | | 11,5 | 50,8 | 54 | 186 | 366 | 1,5 | 120,6 | 122 | 90 | 20° | 146 SAEx4x12,9 | SAE 1 1/2"x16C * |
| | 70.141.350 | SAE,1 | 146 | 95,2 | | 11,5 | 50,8 | 54 | 186 | 366 | 1,5 | 120,6 | 122 | 90 | 20° | 146 SAEx4x14,2 | SAE 1 1/2"x16C * |
| | 70.141.201 | DIN,4 | 120 | 75,0 | 88,9x2,4 | 8,0 | 56 | 54 | 186 | 387 | 3,0 | 101,5 | 122 | 70 | 20° | 120 DINx8x10,2 | SAE 1 1/2"x16C * |
| | 70.141.211 | DIN,4 | 120 | 75,0 | | 8,0 | 56 | 54 | 186 | 387 | 3,0 | 101,5 | 122 | 70 | 20° | 120 DINx8x8,1 | SAE 1 1/2"x16C * |
| | 70.141.221 | SAE,1 | 114 | 69,8 | | 7,5 | 42,9 | 54 | 186 | 361 | 1,4 | 95,3 | 122 | 70 | 20° | 114 SAEx4x11,3 | SAE 1 1/2"x16C * |
| | 70.141.231 | SAE,1 | 114 | 69,8 | | 7,5 | 42,9 | 54 | 186 | 361 | 1,4 | 95,3 | 122 | 70 | 20° | 114 SAEx4x12,2 | SAE 1 1/2"x16C * |
| | 70.141.241 | SAE,1 | 146 | 95,2 | | 11,5 | 50,8 | 54 | 186 | 366 | 1,5 | 120,6 | 122 | 70 | 20° | 146 SAEx4x12,9 | SAE 1 1/2"x16C * |
| | 70.141.251 | SAE,1 | 146 | 95,2 | | 11,5 | 50,8 | 54 | 186 | 366 | 1,5 | 120,6 | 122 | 70 | 20° | 146 SAEx4x14,2 | SAE 1 1/2"x16C * |
| | 70.141.301 | DIN,4 | 120 | 75,0 | 88,9x2,4 | 8,0 | 56 | 54 | 186 | 387 | 3,0 | 101,5 | 122 | 90 | 20° | 120 DINx8x10,2 | SAE 1 1/2"x16C * |
| | 70.141.311 | DIN,4 | 120 | 75,0 | | 8,0 | 56 | 54 | 186 | 387 | 3,0 | 101,5 | 122 | 90 | 20° | 120 DINx8x8,1 | SAE 1 1/2"x16C * |
| | 70.141.321 | SAE,1 | 114 | 69,8 | | 7,5 | 42,9 | 54 | 186 | 361 | 1,4 | 95,3 | 122 | 90 | 20° | 114 SAEx4x11,3 | SAE 1 1/2"x16C * |
| | 70.141.331 | SAE,1 | 114 | 69,8 | | 7,5 | 42,9 | 54 | 186 | 361 | 1,4 | 95,3 | 122 | 90 | 20° | 114 SAEx4x12,2 | SAE 1 1/2"x16C * |
| | 70.141.341 | SAE,1 | 146 | 95,2 | | 11,5 | 50,8 | 54 | 186 | 366 | 1,5 | 120,6 | 122 | 90 | 20° | 146 SAEx4x12,9 | SAE 1 1/2"x16C * |
| | 70.141.351 | SAE,1 | 146 | 95,2 | | 11,5 | 50,8 | 54 | 186 | 366 | 1,5 | 120,6 | 122 | 90 | 20° | 146 SAEx4x14,2 | SAE 1 1/2"x16C * |
| 1480 | 70.148.010 | DIN,4 | 120 | 75,0 | 76,2x2,4 | 8,5 | 65 | 51,6 | 196,4 | 418 | 2,5 | 101,5 | 127 | 70 | 20° | 120 DINx8x8,2 | SAE 1 3/4"x16C * |
| | 70.148.011 | DIN,4 | 120 | 75,0 | | 8,5 | 65 | 51,6 | 196,4 | 418 | 2,5 | 101,5 | 127 | 70 | 20° | 120 DINx8x10,2 | SAE 1 3/4"x16C * |
| | 70.148.100 | SAE,1 | 116 | 69,8 | | 9,0 | 65 | 51,6 | 196,4 | 418 | 1,4 | 95,3 | 127 | 70 | 20° | 116 SAEx4x12,2 | SAE 1 3/4"x16C * |
| | 70.148.101 | SAE,1 | 146 | 95,2 | | 9,0 | 50,8 | 51,6 | 196,4 | 390 | 1,5 | 120,6 | 127 | 70 | 20° | 146 SAEx4x12,9 | SAE 1 3/4"x16C * |
| | 70.148.102 | SAE,1 | 146 | 95,2 | | 9,0 | 50,8 | 51,6 | 196,4 | 390 | 1,5 | 120,6 | 127 | 70 | 20° | 146 SAEx4x14,3 | SAE 1 3/4"x16C * |
| | 70.148.103 | XS,5 | 120 | - | | 16,5 | 63,5 | 51,6 | 196,4 | 415 | - | 100,0 | 127 | 70 | 25° | 120 XSx4x11,1 | SAE 1 3/4"x16C * |
| | 70.148.020 | DIN,4 | 120 | 75,0 | 88,9x2,4 | 8,5 | 65 | 51,6 | 196,4 | 418 | 2,5 | 101,5 | 127 | 70 | 20° | 120 DINx8x8,2 | SAE 1 3/4"x16C * |
| | 70.148.021 | DIN,4 | 120 | 75,0 | | 8,5 | 65 | 51,6 | 196,4 | 418 | 2,5 | 101,5 | 127 | 70 | 20° | 120 DINx8x10,2 | SAE 1 3/4"x16C * |
| | 70.148.110 | SAE,1 | 116 | 69,8 | | 9,0 | 65 | 51,6 | 196,4 | 418 | 1,4 | 95,3 | 127 | 70 | 20° | 116 SAEx4x12,2 | SAE 1 3/4"x16C * |
| | 70.148.111 | SAE,1 | 146 | 95,2 | | 9,0 | 50,8 | 51,6 | 196,4 | 390 | 1,5 | 120,6 | 127 | 70 | 20° | 146 SAEx4x12,9 | SAE 1 3/4"x16C * |
| | 70.148.112 | SAE,1 | 146 | 95,2 | | 9,0 | 50,8 | 51,6 | 196,4 | 390 | 1,5 | 120,6 | 127 | 70 | 20° | 146 SAEx4x14,3 | SAE 1 3/4"x16C * |
| | 70.148.113 | XS,5 | 120 | - | | 16,5 | 63,5 | 51,6 | 196,4 | 415 | - | 100,0 | 127 | 70 | 25° | 120 XSx4x11,1 | SAE 1 3/4"x16C * |
| 1510 | 70.151.013 | DIN,4 | 120,0 | 75,0 | 76,2x2,4 | 8,0 | 75,0 | 71,4 | 192,6 | 459 | 3,0 | 101,5 | 136 | 70 | 20° | 120 DINx8x10,2 | SAE 1 3/4"x16C * |
| | 70.151.023 | DIN,4 | 150,0 | 90,0 | | 11,0 | 90,0 | 71,4 | 192,6 | 474 | 3,4 | 130,0 | 136 | 70 | 20° | 150 DINx8x12,2 | SAE 1 3/4"x16C * |
| | 70.151.033 | DIN,4 | 150,0 | 90,0 | | 11,0 | 90,0 | 71,4 | 192,6 | 474 | 3,4 | 130,0 | 136 | 70 | 20° | 150 DINx8x10,2 | SAE 1 3/4"x16C * |
| | 70.151.043 | DIN,4 | 165,0 | 95,0 | | 11,0 | 90,0 | 71,4 | 192,6 | 474 | 3,4 | 140,0 | 136 | 70 | 20° | 165 DINx8x16,2 | SAE 1 3/4"x16C * |
| | 70.151.053 | DIN,4 | 120,0 | 75,0 | | 8,0 | 75,0 | 71,4 | 192,6 | 459 | 3,0 | 101,5 | 136 | 70 | 20° | 120 DINx8x8,2 | SAE 1 3/4"x16C * |
| | 70.151.103 | SAE,1 | 146,0 | 95,2 | | 9,0 | 63,5 | 71,4 | 192,6 | 447 | 1,8 | 120,6 | 136 | 70 | 20° | 146 SAEx4x12,9 | SAE 1 3/4"x16C * |
| | 70.151.113 | SAE,1 | 146,0 | 95,2 | | 9,0 | 63,5 | 71,4 | 192,6 | 447 | 1,8 | 120,6 | 136 | 70 | 20° | 146 SAEx4x14,3 | SAE 1 3/4"x16C * |
| | 70.151.123 | SAE,4 | 130,0 | 90,0 | | 9,0 | 75,0 | 71,4 | 192,6 | 459 | 2,8 | 112,0 | 136 | 70 | 20° | 130 SAEx8x10,2 | SAE 1 3/4"x16C * |
| | 70.151.153 | XS,5 | 120,0 | - | | 15 | 70,0 | 71,4 | 192,6 | 449 | - | 100,0 | 136 | 70 | 25° | 120 XSx4x11,1 | SAE 1 3/4"x16C * |

E= NUMBER OF HOLES / LOCHANZAHL / DELİK SAYISI
ß= JOINT ANGLE / BEUGEWINKEL / MAFSAL AÇISI

O= SPIGIT DEPTH / ZENTRIERBOHRUNGTIEFE / SPİGOT DERİNLİĞİ
(*) SLIP STUB RILSAN COATED / WELLENZAPFEN RILSAN BESCHICHTET / KAYICI MIL RILSAN KAPLI

# UZMANKARDAN



## PROPELLER SHAFTS WITH SLIDING MOVEMENT
## GELENKWELLEN MIT LAENGENAUSGLEICH / KAYICILI ARKA ŞAFTLAR

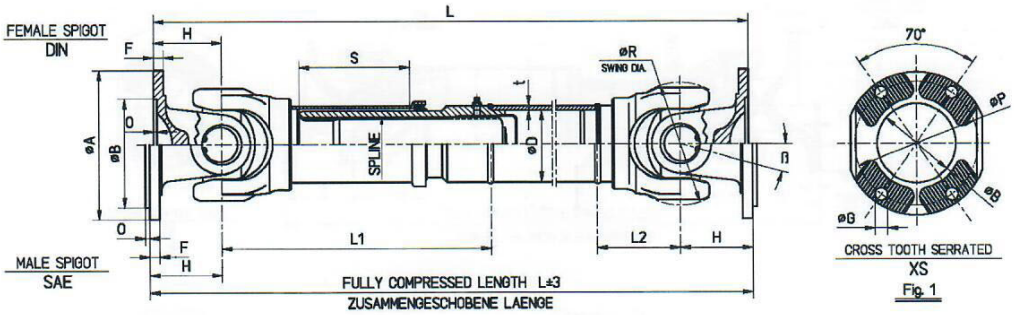


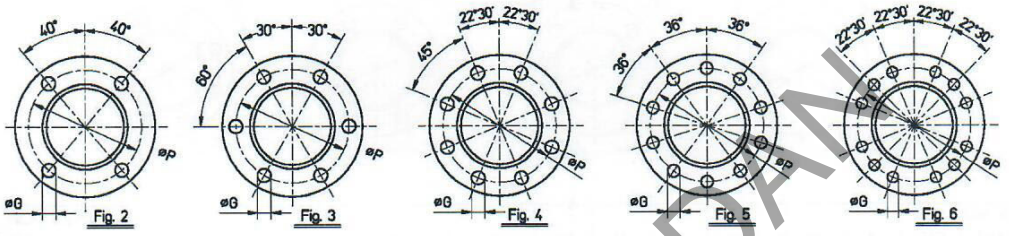


**KAT-70/5** **12/01/2009**

| SERIE BAUGR SERİ | CATALOGUE NO KATALOG NR KATALOG NO | FIG | A | B | Dxt | F | H | L2 | L1 | L MIN | O | P | R | S | ß° | CONNECTION ANSCHLUSS A,TYPExExG | SPLINE |
|---|---|---|---|---|---|---|---|---|---|---|---|---|---|---|---|---|---|
| 1480 | 70.148.201 | DIN,4 | 120 | 75,0 | | 8,5 | 65 | 51,6 | 217 | 430 | 2,5 | 101,5 | 122 | 110 | 20° | 120 DINx8x8,2 | 45x2,5x16 DIN5480** |
| | 70.152.211 | DIN,4 | 120 | 75,0 | | 8,5 | 65 | 51,6 | 217 | 430 | 2,5 | 101,5 | 122 | 110 | 22° | 120 DINx8x10,2 | 45x2,5x16 DIN5480** |
| | 70.148.301 | SAE,2 | 116 | 69,8 | | 9,0 | 65 | 51,6 | 217 | 430 | 1,4 | 120,6 | 122 | 110 | 20° | 116 SAEx4x12,2 | 45x2,5x16 DIN5480** |
| | 70.152.311 | SAE,2 | 146 | 95,2 | 76,2x2,4 | 9,0 | 50,8 | 51,6 | 217 | 400 | 1,4 | 120,6 | 122 | 110 | 20° | 146 SAEx4x12,9 | 45x2,5x16 DIN5480** |
| | 70.152.321 | SAE,2 | 146 | 95,2 | | 9,0 | 50,8 | 51,6 | 217 | 400 | 1,4 | 120,6 | 122 | 110 | 20° | 146 SAEx4x14,2 | 45x2,5x16 DIN5480** |
| | 70.148.501 | XS,1 | 120 | - | | 16,5 | 63,5 | 51,6 | 217 | 430 | - | 100,0 | 122 | 110 | 25° | 120 XSx4x11,1 | 45x2,5x16 DIN5480** |
| | 70.148.202 | DIN,4 | 120 | 75,0 | | 8,5 | 65 | 51,6 | 217 | 430 | 2,5 | 101,5 | 122 | 110 | 20° | 120 DINx8x8,2 | 45x2,5x16 DIN5480** |
| | 70.152.212 | DIN,4 | 120 | 75,0 | | 8,5 | 65 | 51,6 | 217 | 430 | 2,5 | 101,5 | 122 | 110 | 22° | 120 DINx8x10,2 | 45x2,5x16 DIN5480** |
| | 70.148.302 | SAE,2 | 116 | 69,8 | 88,9x2,4 | 9,0 | 65 | 51,6 | 217 | 430 | 1,4 | 120,6 | 122 | 110 | 20° | 116 SAEx4x12,2 | 45x2,5x16 DIN5480** |
| | 70.152.312 | SAE,2 | 146 | 95,2 | | 9,0 | 50,8 | 51,6 | 217 | 400 | 1,4 | 120,6 | 122 | 110 | 20° | 146 SAEx4x12,9 | 45x2,5x16 DIN5480** |
| | 70.152.322 | SAE,2 | 146 | 95,2 | | 9,0 | 50,8 | 51,6 | 217 | 400 | 1,4 | 120,6 | 122 | 110 | 20° | 146 SAEx4x14,2 | 45x2,5x16 DIN5480** |
| | 70.148.502 | XS,1 | 120 | - | | 16,5 | 63,5 | 51,6 | 217 | 430 | - | 100,0 | 122 | 110 | 25° | 120 XSx4x11,1 | 45x2,5x16 DIN5480** |
| 1510 | 70.151.201 | DIN,4 | 120,0 | 75,0 | | 8,0 | 75,0 | 71,4 | 293 | 585 | 3,0 | 101,5 | 136 | 110 | 20° | 120 DINx8x8,2 | 55x2,5x20 DIN5480** |
| | 70.151.211 | DIN,4 | 120,0 | 75,0 | | 8,0 | 75,0 | 71,4 | 293 | 585 | 3,0 | 101,5 | 136 | 110 | 20° | 120 DINx8x10,2 | 55x2,5x20 DIN5480** |
| | 70.151.221 | DIN,4 | 150,0 | 90,0 | | 11,0 | 90,0 | 71,4 | 293 | 615 | 3,4 | 130,0 | 136 | 110 | 25° | 150 DINx8x12,2 | 55x2,5x20 DIN5480** |
| | 70.151.231 | DIN,4 | 165,0 | 95,0 | | 11,0 | 90,0 | 71,4 | 293 | 615 | 3,4 | 140,0 | 136 | 110 | 32° | 165 DINx8x16,2 | 55x2,5x20 DIN5480** |
| | 70.151.241 | DIN,4 | 150,0 | 90,0 | 88,9x2,4 | 11,0 | 90,0 | 71,4 | 293 | 615 | 3,4 | 130,0 | 136 | 110 | 20° | 150 DINx8x10,2 | 55x2,5x20 DIN5480** |
| | 70.151.301 | SAE,4 | 130,0 | 90,0 | | 9,0 | 75,0 | 71,4 | 293 | 585 | 2,8 | 112,0 | 136 | 110 | 20° | 130 SAEx8x10,2 | 55x2,5x20 DIN5480** |
| | 70.151.311 | SAE,2 | 146,0 | 95,2 | | 9,0 | 63,5 | 71,4 | 293 | 562 | 1,8 | 120,6 | 136 | 110 | 20° | 146 SAEx4x12,9 | 55x2,5x20 DIN5480** |
| | 70.151.321 | SAE,2 | 146,0 | 95,2 | | 9,0 | 63,5 | 71,4 | 293 | 562 | 1,8 | 120,6 | 136 | 110 | 25° | 146 SAEx4x14,3 | 55x2,5x20 DIN5480** |
| | 70.151.501 | XS,1 | 120,0 | - | | 15 | 70,0 | 71,4 | 293 | 575 | - | 100,0 | 136 | 110 | 25° | 120 XSx4x11,1 | 55x2,5x20 DIN5480** |
| | 70.151.202 | DIN,4 | 120,0 | 75,0 | | 8,0 | 75,0 | 81,0 | 293 | 595 | 3,0 | 101,5 | 136 | 110 | 20° | 120 DINx8x8,2 | 55x2,5x20 DIN5480** |
| | 70.151.212 | DIN,4 | 120,0 | 75,0 | | 8,0 | 75,0 | 81,0 | 293 | 595 | 3,0 | 101,5 | 136 | 110 | 20° | 120 DINx8x10,2 | 55x2,5x20 DIN5480** |
| | 70.151.222 | DIN,4 | 150,0 | 90,0 | | 11,0 | 90,0 | 81,0 | 293 | 625 | 3,4 | 130,0 | 136 | 110 | 25° | 150 DINx8x12,2 | 55x2,5x20 DIN5480** |
| | 70.151.232 | DIN,4 | 165,0 | 95,0 | | 11,0 | 90,0 | 81,0 | 293 | 625 | 3,4 | 140,0 | 136 | 110 | 32° | 165 DINx8x16,2 | 55x2,5x20 DIN5480** |
| | 70.151.242 | DIN,4 | 150,0 | 90,0 | 90,0x3,5 | 11,0 | 90,0 | 81,0 | 293 | 625 | 3,4 | 130,0 | 136 | 110 | 20° | 150 DINx8x10,2 | 55x2,5x20 DIN5480** |
| | 70.151.302 | SAE,4 | 130,0 | 90,0 | | 9,0 | 75,0 | 81,0 | 293 | 595 | 2,8 | 112,0 | 136 | 110 | 20° | 130 SAEx8x10,2 | 55x2,5x20 DIN5480** |
| | 70.151.312 | SAE,2 | 146,0 | 95,2 | | 9,0 | 63,5 | 81,0 | 293 | 572 | 1,8 | 120,6 | 136 | 110 | 20° | 146 SAEx4x12,9 | 55x2,5x20 DIN5480** |
| | 70.151.322 | SAE,2 | 146,0 | 95,2 | | 9,0 | 63,5 | 81,0 | 293 | 572 | 1,8 | 120,6 | 136 | 110 | 25° | 146 SAEx4x14,3 | 55x2,5x20 DIN5480** |
| | 70.151.502 | XS,1 | 120,0 | - | | 15 | 70,0 | 81,0 | 293 | 585 | - | 100,0 | 136 | 110 | 25° | 120 XSx4x11,1 | 55x2,5x20 DIN5480** |
| | 70.151.203 | DIN,4 | 120,0 | 75,0 | | 8,0 | 75,0 | 71,4 | 293 | 585 | 3,0 | 101,5 | 136 | 130 | 20° | 120 DINx8x8,2 | 55x2,5x20 DIN5480** |
| | 70.151.213 | DIN,4 | 120,0 | 75,0 | | 8,0 | 75,0 | 71,4 | 293 | 585 | 3,0 | 101,5 | 136 | 130 | 20° | 120 DINx8x10,2 | 55x2,5x20 DIN5480** |
| | 70.151.223 | DIN,4 | 150,0 | 90,0 | | 11,0 | 90,0 | 71,4 | 293 | 615 | 3,4 | 130,0 | 136 | 130 | 25° | 150 DINx8x12,2 | 55x2,5x20 DIN5480** |
| | 70.151.233 | DIN,4 | 165,0 | 95,0 | | 11,0 | 90,0 | 71,4 | 293 | 615 | 3,4 | 140,0 | 136 | 130 | 32° | 165 DINx8x16,2 | 55x2,5x20 DIN5480** |
| | 70.151.243 | DIN,4 | 150,0 | 90,0 | 76,2x2,4 | 11,0 | 90,0 | 71,4 | 293 | 615 | 3,4 | 130,0 | 136 | 130 | 20° | 150 DINx8x10,2 | 55x2,5x20 DIN5480** |
| | 70.151.303 | SAE,4 | 130,0 | 90,0 | | 9,0 | 75,0 | 71,4 | 293 | 585 | 2,8 | 112,0 | 136 | 130 | 20° | 130 SAEx8x10,2 | 55x2,5x20 DIN5480** |
| | 70.151.313 | SAE,2 | 146,0 | 95,2 | | 9,0 | 63,5 | 71,4 | 293 | 562 | 1,8 | 120,6 | 136 | 130 | 20° | 146 SAEx4x12,9 | 55x2,5x20 DIN5480** |
| | 70.151.323 | SAE,2 | 146,0 | 95,2 | | 9,0 | 63,5 | 71,4 | 293 | 562 | 1,8 | 120,6 | 136 | 130 | 25° | 146 SAEx4x14,3 | 55x2,5x20 DIN5480** |
| | 70.151.503 | XS,1 | 120,0 | - | | 15 | 70,0 | 71,4 | 293 | 575 | - | 100,0 | 136 | 130 | 25° | 120 XSx4x11,1 | 55x2,5x20 DIN5480** |

E = NUMBER OF HOLES / LOCHANZAHL / DELİK SAYISI
ß = JOINT ANGLE / BEUGEWINKEL / MAFSAL AÇISI
L = MINIMUM FACE TO FACE LENGTH AVAILABLE / KLEINSTE ZUSAMMENGESCHOBENE LAENGE / MÜMKÜN OLABİLİR MİN. KAPALI ŞAFT BOYU
(**) TUBE SLEEVE RILSAN COATED / KEILNABE RILSAN BESCHICHTET / TÜP KAYICI RILSAN KAPLI

# PROPELLER SHAFTS WITH SLIDING MOVEMENT
# GELENKWELLEN MIT LAENGENAUSGLEICH / KAYICILI ARKA ŞAFTLAR



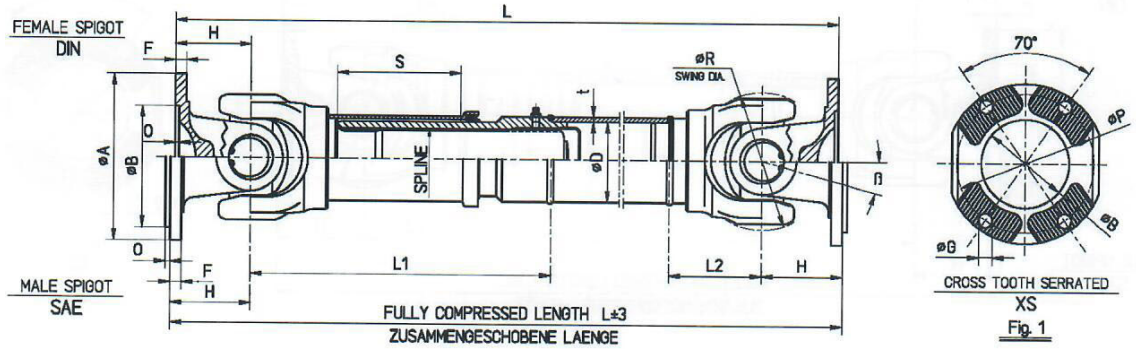


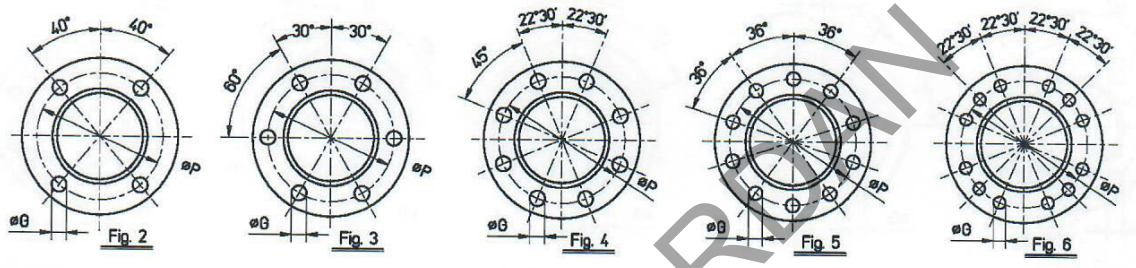


**KAT-70/6**

**12/01/2009**

| SERIE BAUGR SERİ | CATALOGUE NO KATALOG NR KATALOG NO | FIG | A | B | Dxt | F | H | L2 | L1 | L MIN | O | P | R | S | ß° | CONNECTION ANSCHLUSS A,TYPExExG | SPLINE |
|---|---|---|---|---|---|---|---|---|---|---|---|---|---|---|---|---|---|
| 381 | 70.381.011 | XS,1 | 120 | - | 88,9x2,4 | 16,5 | 70,0 | 80,0 | 295 | 545 | - | 100,0 | 126 | 100 | 22° | 120 XSx4x11,1 | 55x2,5x20 DIN5480** |
| | 70.381.021 | XS,1 | 120 | - | | 16,0 | 65,0 | 80,0 | 295 | 535 | - | 100,0 | 126 | 100 | 22° | 120 XSx4x11,1 | 55x2,5x20 DIN5480** |
| | 70.381.031 | XS,1 | 120 | - | | 16,5 | 52,5 | 80,0 | 295 | 510 | - | 100,0 | 126 | 100 | 22° | 120 XSx4x11,1 | 55x2,5x20 DIN5480** |
| | 70.381.012 | XS,1 | 120 | - | 90x2,5 | 16,5 | 70,0 | 80,0 | 295 | 545 | - | 100,0 | 126 | 100 | 22° | 120 XSx4x11,1 | 55x2,5x20 DIN5480** |
| | 70.381.022 | XS,1 | 120 | - | | 16,0 | 65,0 | 80,0 | 295 | 535 | - | 100,0 | 126 | 100 | 22° | 120 XSx4x11,1 | 55x2,5x20 DIN5480** |
| | 70.381.032 | XS,1 | 120 | - | | 16,5 | 52,5 | 80,0 | 295 | 510 | - | 100,0 | 126 | 100 | 22° | 120 XSx4x11,1 | 55x2,5x20 DIN5480** |
| 385 | 70.385.011 | DIN,4 | 150 | 90,0 | 92x5 | 12,0 | 75,0 | 101 | 327 | 614 | 3,5 | 130 | 148 | 110 | 25° | 150 DINx8x12,2 | 65x2,5x24 DIN5480** |
| | 70.385.021 | DIN,4 | 180 | 110,0 | | 12,0 | 82,5 | 101 | 327 | 629 | 3,5 | 155,5 | 148 | 110 | 25° | 180 DINx8x14,2 | 65x2,5x24 DIN5480** |
| | 70.385.031 | DIN,4 | 180 | 110,0 | | 12,0 | 82,5 | 101 | 327 | 629 | 3,5 | 155,5 | 148 | 110 | 25° | 180 DINx8x12,2 | 65x2,5x24 DIN5480** |
| | 70.385.041 | DIN,4 | 165 | 95,0 | | 12,0 | 82,5 | 101 | 327 | 629 | 3,0 | 140 | 148 | 110 | 25° | 165 DINx8x16,2 | 65x2,5x24 DIN5480** |
| | 70.385.051 | DIN,5 | 180 | 110,0 | | 12,0 | 82,5 | 101 | 327 | 629 | 3,5 | 155,5 | 148 | 110 | 25° | 180 DINx10x16,2 | 65x2,5x24 DIN5480** |
| | 70.385.101 | SAE,4 | 175 | 168,2 | | 10,5 | 82,5 | 101 | 327 | 629 | 2,5 | 155,6 | 148 | 110 | 25° | 175 SAEx8x9,7 | 65x2,5x24 DIN5480** |
| | 70.385.511 | XS,1 | 150 | - | | 17,5 | 75,0 | 101 | 327 | 614 | - | 130,0 | 148 | 110 | 24° | 150 XSx4x13,1 | 65x2,5x24 DIN5480** |
| | 70.385.521 | XS,1 | 180 | - | | 16,0 | 90,0 | 101 | 327 | 644 | - | 150,0 | 148 | 110 | 25° | 180 XSx4x15,1 | 65x2,5x24 DIN5480** |
| 389 | 70.389.511 | XS,1 | 150 | - | 100x5 | 17,5 | 85,0 | 116 | 373 | 699 | - | 130,0 | 159 | 150 | 30° | 150 XSx4x13,1 | 72x2,5x27 DIN5480** |
| | 70.389.521 | XS,1 | 180 | - | | 18,0 | 92,5 | 116 | 373 | 715 | - | 150,0 | 159 | 150 | 30° | 180 XSx4x15,1 | 72x2,5x27 DIN5480** |
| | 70.389.531 | XS,1 | 150 | - | | 18,0 | 100,0 | 116 | 383 | 740 | - | 130,0 | 159 | 180 | 44° | 150 XSx4x13,1 | 72x2,5x27 DIN5480** |
| | 70.389.541 | XS,1 | 165 | - | | 17,5 | 97,0 | 116 | 373 | 730 | - | 140,0 | 159 | 150 | 36° | 165 XSx4x13,1 | 72x2,5x27 DIN5480** |
| | 70.389.551 | XS,1 | 150 | - | | 16,5 | 82,0 | 116 | 373 | 705 | - | 130,0 | 159 | 150 | 30° | 150 XSx4x13,1 | 72x2,5x27 DIN5480** |
| | 70.389.561 | XS,1 | 180 | - | | 18,5 | 84,5 | 116 | 373 | 710 | - | 150,0 | 159 | 150 | 30° | 180 XSx4x15,1 | 72x2,5x27 DIN5480** |
| | 70.389.514 | XS,1 | 150 | - | 120x4 | 17,5 | 85,0 | 86 | 256 | 550 | - | 130,0 | 159 | 150 | 30° | 150 XSx4x13,1 | T31-12/24-30° |
| | 70.389.517 | XS,1 | 180 | - | | 18,0 | 92,5 | 86 | 256 | 565 | - | 150,0 | 159 | 150 | 30° | 180 XSx4x15,1 | T31-12/24-30° |
| | 70.389.515 | XS,1 | 150 | - | | 18,0 | 100,0 | 86 | 256 | 580 | - | 130,0 | 159 | 180 | 44° | 150 XSx4x13,1 | T31-12/24-30° |
| | 70.389.516 | XS,1 | 165 | - | | 17,5 | 97,0 | 86 | 256 | 577 | - | 140,0 | 159 | 150 | 36° | 165 XSx4x13,1 | T31-12/24-30° |
| | 70.389.513 | XS,1 | 150 | - | | 16,5 | 82,0 | 86 | 256 | 545 | - | 155,6 | 159 | 150 | 30° | 150 XSx4x13,1 | T31-12/24-30° |
| | 70.389.512 | XS,1 | 180 | - | | 18,5 | 84,5 | 86 | 256 | 550 | - | 155,5 | 159 | 150 | 30° | 180 XSx4x15,1 | T31-12/24-30° |
| 395 | 70.395.012 | DIN,5 | 180 | 110 | 110x6 | 14,0 | 95 | 116 | 405 | 760 | 3,5 | 155,5 | 178 | 160 | 27° | 180 DINx10x16,2 | 80x2,5x30 DIN5480** |
| | 70.395.013 | DIN,4 | 180 | 110 | | 14,0 | 95 | 116 | 405 | 760 | 3,5 | 155,5 | 178 | 160 | 27° | 180 DINx8x14,2 | 80x2,5x30 DIN5480** |
| | 70.395.511 | XS,1 | 180 | - | | 17,5 | 95 | 116 | 405 | 760 | - | 150,0 | 178 | 160 | 27° | 180 XSx4x15,1 | 80x2,5x30 DIN5480** |
| | 70.395.022 | DIN,5 | 180 | 110 | 120x6 | 14,0 | 95 | 116 | 405 | 760 | 3,5 | 155,5 | 178 | 160 | 27° | 180 DINx10x16,2 | 80x2,5x30 DIN5480** |
| | 70.395.023 | DIN,4 | 180 | 110 | | 14,0 | 95 | 116 | 405 | 760 | 3,5 | 155,5 | 178 | 160 | 27° | 180 DINx8x14,2 | 80x2,5x30 DIN5480** |
| | 70.395.521 | XS,1 | 180 | - | | 17,5 | 95 | 116 | 405 | 760 | - | 150,0 | 178 | 160 | 27° | 180 XSx4x15,1 | 80x2,5x30 DIN5480** |
| 446 | 70.446.521 | XS,1 | 150 | - | 120x4 | 17,5 | 87,0 | 90 | 345 | 651 | - | 130,0 | 170 | 130 | 25° | 150 XSx4x13,1 | 75x2,5x28 DIN5481 |
| | 70.446.511 | XS,1 | 180 | - | | 17,5 | 87,0 | 90 | 345 | 651 | - | 150,0 | 170 | 130 | 25° | 180 XSx4x15,1 | 75x2,5x28 DIN5480 |
| 468 | 70.446.511 | XS,1 | 180 | - | 110x6 | 17,5 | 100,0 | 126 | 348 | 714 | - | 150,0 | 178 | 110 | 22° | 180 XSx4x15,1 | 80x2,5x30 DIN5480** |
| | 70.446.512 | XS,1 | 180 | - | 140X5 | 17,5 | 100,0 | 145 | 370 | 755 | - | 150,0 | 178 | 110 | 22° | 180 XSx4x15,1 | 80x2,5x30 DIN5480** |

E = NUMBER OF HOLES / LOCHANZAHL / DELİK SAYISI
ß = JOINT ANGLE / BEUGEWINKEL / MAFSAL AÇISI
L = MINIMUM FACE TO FACE LENGTH AVAILABLE / KLEINSTE ZUSAMMENGESCHOBENE LAENGE / MÜMKÜN OLABİLİR MİN. KAPALI ŞAFT BOYU
(**) TUBE SLEEVE RILSAN COATED / KEILNABE RILSAN BESCHICHTET / TÜP KAYICI RILSAN KAPLI

# PROPELLER SHAFTS WITH SLIDING MOVEMENT
# GELENKWELLEN MIT LAENGENAUSGLEICH / KAYICILI ARKA ŞAFTLAR

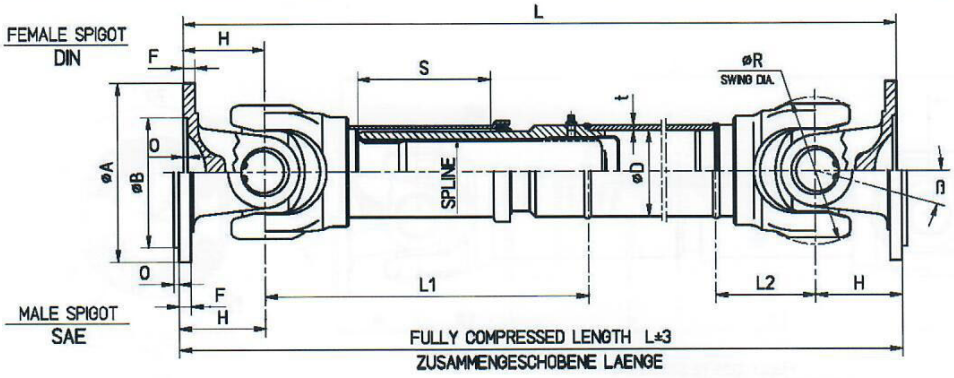


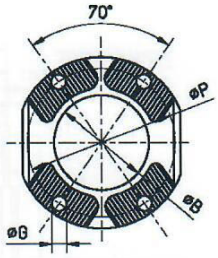


CROSS TOOTH SERRATED
XS
Fig. 1

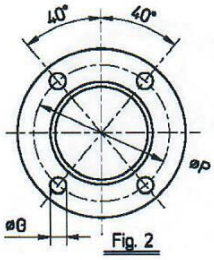


Fig. 2

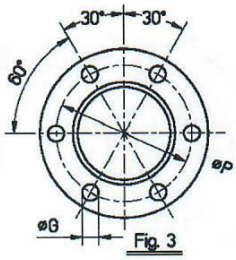


Fig. 3

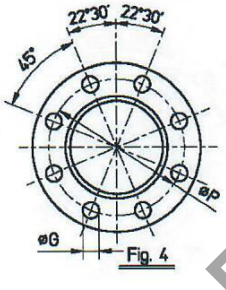


Fig. 4

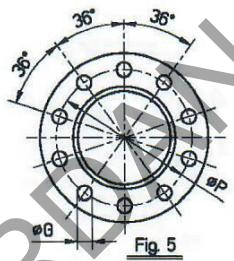


Fig. 5

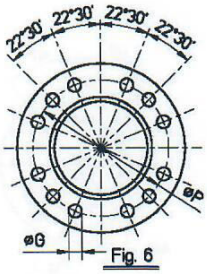


Fig. 6

KAT-70/7 — 12/01/2009

| SERIE BAUGR SERİ | CATALOGUE NO KATALOG NR KATALOG NO | FIG | A | B | Dxt | F | H | L2 | L1 | L MIN | O | P | R | S | ß° | CONNECTION ANSCHLUSS A,TYPExExG | SPLINE |
|---|---|---|---|---|---|---|---|---|---|---|---|---|---|---|---|---|---|
| 420 | 70.420.011 | DIN,3 | 100 | 57,0 | | 7,0 | 58,0 | 45 | 200 | 398 | 3,0 | 84,0 | 98 | 80 | 27° | 100 DINx6x 8,2 | 38x2x18 DIN5480** |
| | 70.420.021 | DIN,4 | 120 | 75,0 | | 8,0 | 54,0 | 45 | 200 | 390 | 3,0 | 101,5 | 98 | 80 | 27° | 120 DINx8x10,2 | 38x2x18 DIN5480** |
| | 70.420.101 | SAE,2 | 114 | 69,8 | 76,2x2,4 | 8,0 | 40,0 | 45 | 200 | 362 | 1,4 | 95,3 | 98 | 80 | 20° | 114 SAEx4x12,4 | 38x2x18 DIN5480** |
| | 70.420.111 | SAE,2 | 114 | 60,0 | | 8,0 | 40,0 | 45 | 200 | 362 | 1,4 | 90,0 | 98 | 80 | 20° | 110 SAEx4x10,2 | 38x2x18 DIN5480** |
| | 70.420.121 | SAE,2 | 114 | 69,8 | | 8,0 | 40,0 | 45 | 200 | 362 | 1,4 | 95,3 | 98 | 80 | 20° | 114 SAEx4x11,3 | 38x2x18 DIN5480** |
| | 70.420.131 | SAE,2 | 100 | 60,3 | | 6,8 | 58,0 | 45 | 200 | 398 | 1,4 | 79,4 | 98 | 80 | 27° | 97 SAEx4x10,2 | 38x2x18 DIN5480** |
| | 70.420.012 | DIN,3 | 100 | 57,0 | | 7,0 | 58,0 | 45 | 207 | 400 | 3,0 | 84,0 | 98 | 60 | 27° | 100 DINx6x 8,2 | SAE 1 1/6" x 16C |
| | 70.420.022 | DIN,4 | 120 | 75,0 | | 8,0 | 54,0 | 45 | 207 | 392 | 3,0 | 101,5 | 98 | 60 | 27° | 120 DINx8x10,2 | SAE 1 1/6" x 16C |
| | 70.420.102 | SAE,2 | 114 | 69,8 | 76,2x2,4 | 8,0 | 40,0 | 45 | 207 | 364 | 1,4 | 95,3 | 98 | 60 | 20° | 114 SAEx4x12,4 | SAE 1 1/6" x 16C |
| | 70.420.112 | SAE,2 | 114 | 60,0 | | 8,0 | 40,0 | 45 | 207 | 364 | 1,4 | 90,0 | 98 | 60 | 20° | 110 SAEx4x10,2 | SAE 1 1/6" x 16C |
| | 70.420.122 | SAE,2 | 114 | 69,8 | | 8,0 | 40,0 | 45 | 207 | 364 | 1,4 | 95,3 | 98 | 60 | 20° | 114 SAEx4x11,3 | SAE 1 1/6" x 16C |
| | 70.420.132 | SAE,2 | 100 | 60,3 | | 6,8 | 58,0 | 45 | 207 | 400 | 1,4 | 79,4 | 98 | 60 | 27° | 97 SAEx4x10,2 | SAE 1 1/6" x 16C |
| | 70.420.013 | DIN,3 | 100 | 57,0 | | 7,0 | 58,0 | 55 | 217 | 444 | 3,0 | 84,0 | 98 | 110 | 27° | 100 DINx6x 8,2 | 38x2x18 DIN5480** |
| | 70.420.023 | DIN,4 | 120 | 75,0 | | 8,0 | 54,0 | 55 | 217 | 436 | 3,0 | 101,5 | 98 | 110 | 27° | 120 DINx8x10,2 | 38x2x18 DIN5480** |
| | 70.420.103 | SAE,2 | 114 | 69,8 | | 8,0 | 40,0 | 55 | 217 | 408 | 1,4 | 95,3 | 98 | 110 | 20° | 114 SAEx4x12,4 | 38x2x18 DIN5480** |
| | 70.420.113 | SAE,2 | 114 | 60,0 | 52x4 | 8,0 | 40,0 | 55 | 217 | 408 | 1,4 | 90,0 | 98 | 110 | 20° | 110 SAEx4x10,2 | 38x2x18 DIN5480** |
| | 70.420.123 | SAE,2 | 114 | 69,8 | | 8,0 | 40,0 | 55 | 217 | 408 | 1,4 | 95,3 | 98 | 110 | 20° | 114 SAEx4x11,3 | 38x2x18 DIN5480** |
| | 70.420.133 | SAE,2 | 100 | 60,3 | | 6,8 | 58,0 | 55 | 217 | 444 | 1,4 | 79,4 | 98 | 110 | 27° | 97 SAEx4x10,2 | 38x2x18 DIN5480** |
| | 70.420.014 | DIN,3 | 100 | 57,0 | | 7,0 | 58,0 | 55 | 217 | 420 | 3,0 | 84,0 | 98 | 80 | 27° | 100 DINx6x 8,2 | 38x2x18 DIN5480** |
| | 70.420.024 | DIN,4 | 120 | 75,0 | | 8,0 | 54,0 | 55 | 217 | 412 | 3,0 | 101,5 | 98 | 80 | 27° | 120 DINx8x10,2 | 38x2x18 DIN5480** |
| | 70.420.104 | SAE,2 | 114 | 69,8 | | 8,0 | 40,0 | 55 | 217 | 384 | 1,4 | 95,3 | 98 | 80 | 20° | 114 SAEx4x12,4 | 38x2x18 DIN5480** |
| | 70.420.114 | SAE,2 | 114 | 60,0 | 52x4 | 8,0 | 40,0 | 55 | 217 | 384 | 1,4 | 90,0 | 98 | 80 | 20° | 110 SAEx4x10,2 | 38x2x18 DIN5480** |
| | 70.420.124 | SAE,2 | 114 | 69,8 | | 8,0 | 40,0 | 55 | 217 | 384 | 1,4 | 95,3 | 98 | 80 | 20° | 114 SAEx4x11,3 | 38x2x18 DIN5480** |
| | 70.420.134 | SAE,2 | 100 | 60,3 | | 6,8 | 58,0 | 55 | 217 | 420 | 1,4 | 79,4 | 98 | 80 | 27° | 97 SAEx4x10,2 | 38x2x18 DIN5480** |
| | 70.420.015 | DIN,3 | 100 | 57,0 | | 7,0 | 58,0 | 45 | 200 | 398 | 3,0 | 84,0 | 98 | 80 | 27° | 100 DINx6x 8,2 | 38x2x18 DIN5480** |
| | 70.420.025 | DIN,4 | 120 | 75,0 | | 8,0 | 54,0 | 45 | 200 | 390 | 3,0 | 101,5 | 98 | 80 | 27° | 120 DINx8x10,2 | 38x2x18 DIN5480** |
| | 70.420.105 | SAE,2 | 114 | 69,8 | 76,2x1,6 | 8,0 | 40,0 | 45 | 200 | 362 | 1,4 | 95,3 | 98 | 80 | 20° | 114 SAEx4x12,4 | 38x2x18 DIN5480** |
| | 70.420.115 | SAE,2 | 114 | 60,0 | | 8,0 | 40,0 | 45 | 200 | 362 | 1,4 | 90,0 | 98 | 80 | 20° | 110 SAEx4x10,2 | 38x2x18 DIN5480** |
| | 70.420.125 | SAE,2 | 114 | 69,8 | | 8,0 | 40,0 | 45 | 200 | 362 | 1,4 | 95,3 | 98 | 80 | 20° | 114 SAEx4x11,3 | 38x2x18 DIN5480** |
| | 70.420.135 | SAE,2 | 100 | 60,3 | | 6,8 | 58,0 | 45 | 200 | 398 | 1,4 | 79,4 | 98 | 80 | 27° | 97 SAEx4x10,2 | 38x2x18 DIN5480** |
| | 70.420.016 | DIN,3 | 100 | 57,0 | | 7,0 | 58,0 | 45 | 207 | 400 | 3,0 | 84,0 | 98 | 60 | 27° | 100 DINx6x 8,2 | SAE 1 1/6" x 16C |
| | 70.420.026 | DIN,4 | 120 | 75,0 | | 8,0 | 54,0 | 45 | 207 | 392 | 3,0 | 101,5 | 98 | 60 | 27° | 120 DINx8x10,2 | SAE 1 1/6" x 16C |
| | 70.420.106 | SAE,2 | 114 | 69,8 | 76,2x1,6 | 8,0 | 40,0 | 45 | 207 | 364 | 1,4 | 95,3 | 98 | 60 | 20° | 114 SAEx4x12,4 | SAE 1 1/6" x 16C |
| | 70.420.116 | SAE,2 | 114 | 60,0 | | 8,0 | 40,0 | 45 | 207 | 364 | 1,4 | 90,0 | 98 | 60 | 20° | 110 SAEx4x10,2 | SAE 1 1/6" x 16C |
| | 70.420.126 | SAE,2 | 114 | 69,8 | | 8,0 | 40,0 | 45 | 207 | 364 | 1,4 | 95,3 | 98 | 60 | 20° | 114 SAEx4x11,3 | SAE 1 1/6" x 16C |
| | 70.420.136 | SAE,2 | 100 | 60,3 | | 6,8 | 58,0 | 45 | 207 | 400 | 1,4 | 79,4 | 98 | 60 | 27° | 97 SAEx4x10,2 | SAE 1 1/6" x 16C |

E = NUMBER OF HOLES / LOCHANZAHL / DELİK SAYISI
ß = JOINT ANGLE / BEUGEWINKEL / MAFSAL AÇISI
L = MINIMUM FACE TO FACE LENGTH AVAILABLE / KLEINSTE ZUSAMMENGESCHOBENE LAENGE / MÜMKÜN OLABİLİR MİN. KAPALI ŞAFT BOYU
(**) TUBE SLEEVE RILSAN COATED / KEILNABE RILSAN BESCHICHTET / TÜP KAYICI RILSAN KAPLI

## INDUSTRIAL SHAFTS WITH SLIDING MOVEMENT
## GELENKWELLEN MIT LAENGENAUSGLEICH FÜR INDUSTRIE / KAYICILI SANAYİ ŞAFTLARI



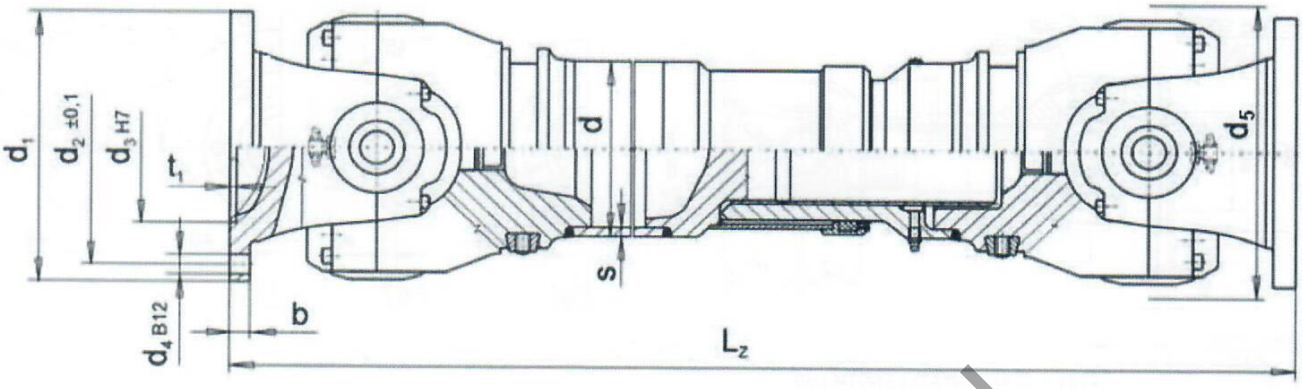


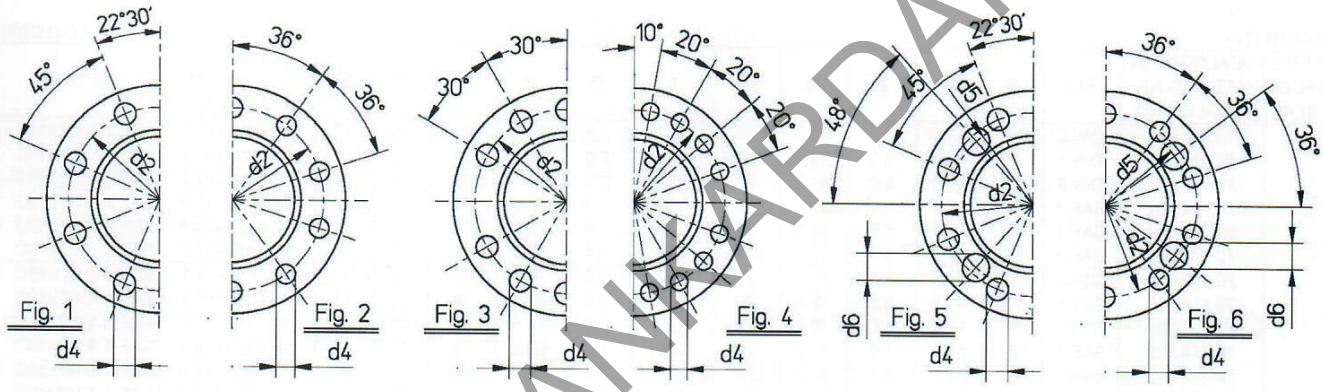




KAT-70/ES

23/01/2009

| CATALOGUE NO KATALOG NR KATALOG NO | FIG | SERIE BAUGR SERİ | MdB (Nm) | MdG (Nm) | MdW (Nm) | d x s | d1 | d2 | d5 | d3 | t1 | z x d6 | d5 | Lz | LA Extension | ß° max. |
|---|---|---|---|---|---|---|---|---|---|---|---|---|---|---|---|---|
| ES.70.001 | 1 | GWS-85 | 37000 | 55000 | 23000 | 162x9,85 | 250 | 218 | - | 140 | 6 | - | 250 | 905 | 110 | 15 |
| ES.70.002 | 1 | GWS-86 | 45000 | 58000 | 24000 | 165x12,5 | 285 | 245 | - | 175 | 6 | - | 250 | 905 | 110 | 15 |
| ES.70.003 | 1 | GWS-90 | 85000 | 120000 | 45000 | 218x10,5 | 315 | 280 | - | 175 | 6 | - | 285 | 1005 | 135 | 15 |
| ES.70.004 | 2 | GWS-95 | 125000 | 175000 | 58000 | 219x15,0 | 350 | 310 | - | 220 | 7 | - | 315 | 1105 | 135 | 15 |
| ES.70.005 | 2 | GWS-97 | 190000 | 260000 | 100000 | 273x19,0 | 390 | 345 | - | 250 | 7 | - | 350 | 1285 | 170 | 15 |
| ES.70.006 | 2 | GWS-97* | 150000 | 200000 | 70000 | 273x11,6 | 390 | 345 | - | 250 | 7 | - | 350 | 1285 | 170 | 15 |
| ES.70.007 | 2 | GWS-98 | 155000 | 210000 | 80000 | 273x19,0 | 390 | 345 | - | 250 | 7 | - | 370 | 1285 | 170 | 15 |
| ES.70.008 | 2 | GWS-98* | 150000 | 200000 | 70000 | 273x11,6 | 390 | 345 | - | 250 | 7 | - | 370 | 1285 | 170 | 15 |
| ES.70.009 | 1 | WUX-200 | 18000 | 35000 | - | 146x13 | 200 | 170 | - | 120 | 5 | - | 200 | 900 | 120 | 15 |
| ES.70.010 | 1 | WUX-225 | 20000 | 40000 | - | 159x12 | 225 | 196 | - | 135 | 5 | - | 225 | 1000 | 140 | 15 |
| ES.70.011 | 1 | WUX-250 | 31500 | 63000 | - | 180x14 | 250 | 218 | - | 150 | 6 | - | 250 | 1060 | 140 | 15 |
| ES.70.012 | 1 | WUX-265 | 40000 | 80000 | - | 194x15 | 265 | 233 | - | 160 | 6 | - | 265 | 1120 | 140 | 15 |
| ES.70.013 | 1 | WUX-285 | 45000 | 90000 | - | 203x16 | 285 | 245 | - | 170 | 7 | - | 285 | 1270 | 140 | 15 |
| ES.70.014 | 3 | WUX-315 | 63000 | 125000 | - | 219x19 | 315 | 280 | - | 185 | 8 | - | 315 | 1390 | 140 | 15 |
| ES.70.015 | 3 | WUX-350 | 90000 | 180000 | - | 245x22 | 350 | 310 | - | 210 | 8 | - | 350 | 1520 | 150 | 15 |
| ES.70.016 | 3 | WUX-390 | 125000 | 250000 | - | 273x25 | 390 | 345 | - | 235 | 8 | - | 390 | 1530 | 170 | 15 |
| ES.70.017 | 4 | WUX-440 | 180000 | 355000 | - | 325x25 | 440 | 390 | - | 255 | 10 | - | 440 | 1690 | 190 | 15 |
| ES.70.018 | 4 | WUX-490 | 250000 | 500000 | - | 351x30 | 490 | 435 | - | 275 | 12 | - | 490 | 1850 | 190 | 15 |
| ES.70.019 | 4 | WUX-550 | 355000 | 710000 | - | 402x32 | 550 | 492 | - | 320 | 12 | - | 550 | 2060 | 240 | 15 |
| ES.70.020 | 4 | WUX-620 | 500000 | 1000000 | - | 426x40 | 620 | 555 | - | 380 | 12 | - | 620 | 2280 | 250 | 15 |
| ES.70.021 | 5 | GB-390.60 | 47000 | 60000 | 23000 | 167,7x9,8 | 285 | 245 | 240 | 175 | 6 | 4 x 28 | 240 | 1450 | 220 | 15 |
| ES.70.022 | 5 | GB-390.65 | 70000 | 90000 | 36000 | 218,2x8,7 | 315 | 280 | 270 | 175 | 6 | 4 x 30 | 265 | 1450 | 220 | 15 |
| ES.70.023 | 6 | GB-390.70 | 102000 | 130000 | 53000 | 219x13,3 | 350 | 310 | 300 | 220 | 7 | 4 x 32 | 300 | 2000 | 350 | 15 |
| ES.70.024 | 6 | GB-390.75 | 145000 | 190000 | 75000 | 273x11,6 | 390 | 345 | 340 | 250 | 7 | 4 x 32 | 330 | 2000 | 350 | 15 |

z:NUMBER OF HOLES / LOCHANZAHL / DELİK SAYISI

# UZMANKARDAN

68

## PROPELLER SHAFTS WITH SLIDING MOVEMENT, SHORT DESIGN / G.WELLEN MIT LAENGENAUSGLEICH, KURZAUSFÜHRUNG / KAYICILI ŞAFTLAR, KISA TİP

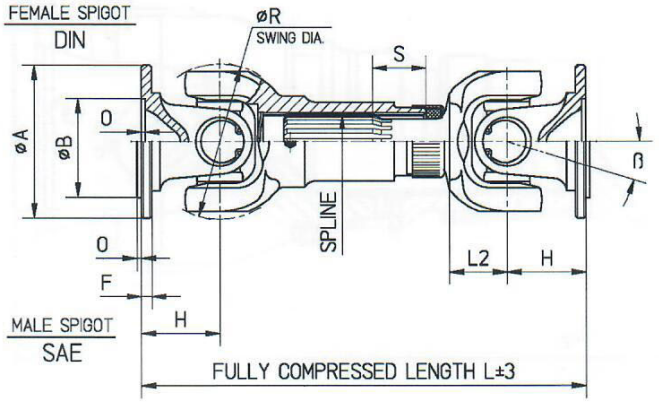


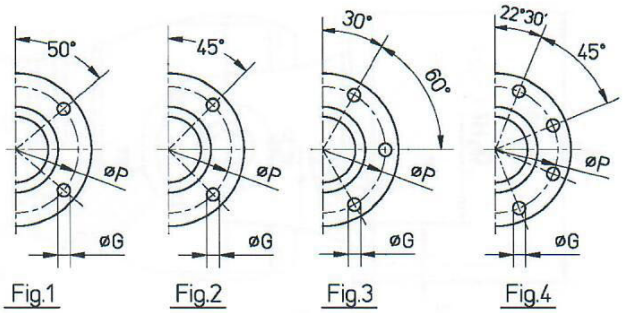


**KAT-70/114Y** **13/01/2009**

| SERIE BAUGR SERI | CATALOGUE NO KATALOG NR KATALOG NO | FIG | A | B | F | H | L2 | L | O | P | R | S | ß° | CONNECTION ANSCHLUSS A,TYPExExG | SPLINE |
|---|---|---|---|---|---|---|---|---|---|---|---|---|---|---|---|
| 1140 | 70.114.602 | DIN,2 | 90 | 47,0 | 5,5 | 40,0 | 29 | 214 | 2,5 | 74,5 | 76 | 25 | 17 | 90 DINx4x8,1 | SAE 1 1/16"x16C |
| | 70.114.612 | DIN,3 | 75 | 42,0 | 5,5 | 39,0 | 29 | 212 | 2,0 | 62,0 | 76 | 25 | 17 | 75 DINx6x6,2 | SAE 1 1/16"x16C |
| | 70.114.622 | DIN,3 | 90 | 47,0 | 6,0 | 40,0 | 29 | 214 | 2,5 | 74,5 | 76 | 25 | 17 | 90 DINx6x9,2 | SAE 1 1/16"x16C |
| | 70.114.802 | SAE,1 | 88 | 57,1 | 5,2 | 30,2 | 29 | 194 | 1,2 | 69,8 | 76 | 21 | 17 | 88 SAEx4x8,1 | SAE 1 1/16"x16C |
| | 70.114.812 | SAE,1 | 92 | 51,1 | 5,5 | 40,0 | 29 | 214 | 1,4 | 76,2 | 76 | 25 | 17 | 92 SAEx4x9,8 | SAE 1 1/16"x16C |
| | 70.114.822 | SAE,1 | 92 | 57,1 | 5,5 | 40,0 | 29 | 214 | 1,4 | 77,8 | 76 | 25 | 17 | 92 SAEx4x8,2 | SAE 1 1/16"x16C |
| | 70.114.603 | DIN,2 | 90 | 47,0 | 5,5 | 40,0 | 29 | 229 | 2,5 | 74,5 | 76 | 25 | 15 | 90 DINx4x8,1 | SAE 1 1/16"x16C |
| | 70.114.613 | DIN,3 | 75 | 42,0 | 5,5 | 39,0 | 29 | 227 | 2,0 | 62,0 | 76 | 25 | 17 | 75 DINx6x6,2 | SAE 1 1/16"x16C |
| | 70.114.623 | DIN,3 | 90 | 47,0 | 6,0 | 40,0 | 29 | 229 | 2,5 | 74,5 | 76 | 25 | 17 | 90 DINx6x9,2 | SAE 1 1/16"x16C |
| | 70.114.803 | SAE,1 | 88 | 57,1 | 5,2 | 30,2 | 29 | 209 | 1,2 | 69,8 | 76 | 25 | 15 | 88 SAEx4x8,1 | SAE 1 1/16"x16C |
| | 70.114.813 | SAE,1 | 92 | 51,1 | 5,5 | 40,0 | 29 | 229 | 1,4 | 76,2 | 76 | 25 | 17 | 92 SAEx4x9,8 | SAE 1 1/16"x16C |
| | 70.114.823 | SAE,1 | 92 | 57,1 | 5,5 | 40,0 | 29 | 229 | 1,4 | 77,8 | 76 | 25 | 17 | 92 SAEx4x8,2 | SAE 1 1/16"x16C |
| | 70.114.604 | DIN,2 | 90 | 47,0 | 5,5 | 40,0 | 38 | 235 | 2,5 | 74,5 | 76 | 40 | 17 | 90 DINx4x8,1 | SAE 1 1/16"x16C |
| | 70.114.614 | DIN,3 | 75 | 42,0 | 5,5 | 39,0 | 38 | 233 | 2,0 | 62,0 | 76 | 40 | 17 | 75 DINx6x6,2 | SAE 1 1/16"x16C |
| | 70.114.624 | DIN,3 | 90 | 47,0 | 6,0 | 40,0 | 38 | 235 | 2,5 | 74,5 | 76 | 40 | 17 | 90 DINx6x9,2 | SAE 1 1/16"x16C |
| | 70.114.804 | SAE,1 | 88 | 57,1 | 5,2 | 30,2 | 38 | 216 | 1,2 | 69,8 | 76 | 40 | 17 | 88 SAEx4x8,1 | SAE 1 1/16"x16C |
| | 70.114.814 | SAE,1 | 92 | 57,1 | 5,5 | 40,0 | 38 | 235 | 1,4 | 76,2 | 76 | 40 | 17 | 92 SAEx4x9,8 | SAE 1 1/16"x16C |
| | 70.114.824 | SAE,1 | 92 | 57,1 | 5,5 | 40,0 | 38 | 235 | 1,4 | 77,8 | 76 | 40 | 17 | 92 SAEx4x8,2 | SAE 1 1/16"x16C |
| | 70.114.605 | DIN,2 | 90 | 47,0 | 5,5 | 40,0 | 29 | 248 | 2,5 | 74,5 | 76 | 25 | 17 | 90 DINx4x8,1 | SAE 1 1/16"x16C |
| | 70.114.615 | DIN,3 | 75 | 42,0 | 5,5 | 39,0 | 29 | 246 | 2,0 | 62,0 | 76 | 25 | 17 | 75 DINx6x6,2 | SAE 1 1/16"x16C |
| | 70.114.625 | DIN,3 | 90 | 47,0 | 6,0 | 40,0 | 29 | 248 | 2,5 | 74,5 | 76 | 25 | 17 | 90 DINx6x9,2 | SAE 1 1/16"x16C |
| | 70.114.805 | SAE,1 | 88 | 57,1 | 5,2 | 30,2 | 29 | 226,4 | 1,2 | 69,8 | 76 | 25 | 17 | 88 SAEx4x8,1 | SAE 1 1/16"x16C |
| | 70.114.815 | SAE,1 | 92 | 51,1 | 5,5 | 40,0 | 29 | 248 | 1,4 | 76,2 | 76 | 25 | 17 | 92 SAEx4x9,8 | SAE 1 1/16"x16C |
| | 70.114.825 | SAE,1 | 92 | 57,1 | 5,5 | 40,0 | 29 | 248 | 1,4 | 77,8 | 76 | 25 | 17 | 92 SAEx4x8,2 | SAE 1 1/16"x16C |
| | 70.114.606 | DIN,2 | 90 | 47,0 | 5,5 | 40,0 | 38 | 254 | 2,5 | 74,5 | 76 | 40 | 17 | 90 DINx4x8,1 | SAE 1 1/16"x16C |
| | 70.114.616 | DIN,3 | 75 | 42,0 | 5,5 | 39,0 | 38 | 252 | 2,0 | 62,0 | 76 | 40 | 17 | 75 DINx6x6,2 | SAE 1 1/16"x16C |
| | 70.114.626 | DIN,3 | 90 | 47,0 | 6,0 | 40,0 | 38 | 254 | 2,5 | 74,5 | 76 | 40 | 17 | 90 DINx6x9,2 | SAE 1 1/16"x16C |
| | 70.114.806 | SAE,1 | 88 | 57,1 | 5,2 | 30,2 | 38 | 234,4 | 1,2 | 69,8 | 76 | 40 | 17 | 88 SAEx4x8,1 | SAE 1 1/16"x16C |
| | 70.114.816 | SAE,1 | 92 | 51,1 | 5,5 | 40,0 | 38 | 254 | 1,4 | 76,2 | 76 | 40 | 17 | 92 SAEx4x9,8 | SAE 1 1/16"x16C |
| | 70.114.826 | SAE,1 | 92 | 57,1 | 5,5 | 40,0 | 38 | 254 | 1,4 | 77,8 | 76 | 40 | 17 | 92 SAEx4x8,2 | SAE 1 1/16"x16C |
| 1310 | 70.131.600 | DIN,2 | 90 | 47,0 | 6,7 | 50 | 40 | 255 | 2,5 | 74,5 | 97 | 23 | 20 | 90 DINx4x8,1 | SAE 1 3/8"x16C |
| | 70.131.610 | DIN,3 | 90 | 47,0 | 6,8 | 50 | 40 | 255 | 2,5 | 74,5 | 97 | 23 | 20 | 90 DINx6x8,1 | SAE 1 3/8"x16C |
| | 70.131.620 | DIN,3 | 90 | 47,0 | 6,7 | 50 | 40 | 255 | 2,5 | 74,5 | 97 | 23 | 20 | 90 DINx6x10,2 | SAE 1 3/8"x16C |
| | 70.131.630 | DIN,3 | 100 | 57,0 | 6,7 | 53 | 40 | 261 | 2,5 | 84,0 | 97 | 23 | 20 | 100 DINx6x8,1 | SAE 1 3/8"x16C |
| | 70.131.640 | DIN,2 | 100 | 57,0 | 6,7 | 53 | 40 | 261 | 2,5 | 84,0 | 97 | 23 | 20 | 100 DINx4x8,1 | SAE 1 3/8"x16C |
| | 70.131.650 | DIN,4 | 120 | 75,0 | 8,0 | 52 | 40 | 259 | 2,5 | 101,5 | 97 | 23 | 20 | 120 DINx8x10,2 | SAE 1 3/8"x16C |
| | 70.131.800 | SAE,1 | 97 | 60,3 | 6,7 | 35 | 40 | 225 | 1,4 | 79,4 | 97 | 23 | 20 | 97 SAEx4x9,7 | SAE 1 3/8"x16C |
| | 70.131.810 | SAE,1 | 97 | 60,3 | 6,7 | 35 | 40 | 225 | 1,4 | 76,3 | 97 | 23 | 20 | 97 SAEx4x10,2 | SAE 1 3/8"x16C |
| | 70.131.820 | SAE,1 | 92 | 57,1 | 6,7 | 35 | 40 | 225 | 1,4 | 76,2 | 97 | 23 | 20 | 92 SAEx4x9,7 | SAE 1 3/8"x16C |
| | 70.131.830 | SAE,1 | 114 | 69,8 | 8,2 | 35 | 40 | 225 | 1,4 | 95,3 | 97 | 23 | 20 | 114 SAEx4x11,3 | SAE 1 3/8"x16C |
| | 70.131.840 | SAE,1 | 114,5 | 69,8 | 8,2 | 35 | 40 | 225 | 1,4 | 95,3 | 97 | 23 | 20 | 114 SAEx4x12,2 | SAE 1 3/8"x16C |

E= NUMBER OF HOLES / LOCHANZAHL / DELİK SAYISI
ß= JOINT ANGLE / BEUGEWINKEL / MAFSAL AÇISI
O= SPIGIT DEPTH / ZENTRIERBOHRUNGTIEFE / SPİGOT DERİNLİĞİ

## PROPELLER SHAFTS WITH SLIDING MOVEMENT, SHORT DESIGN / G.WELLEN MIT LAENGENAUSGLEICH, KURZAUSFÜHRUNG / KAYICILI ŞAFTLAR, KISA TİP



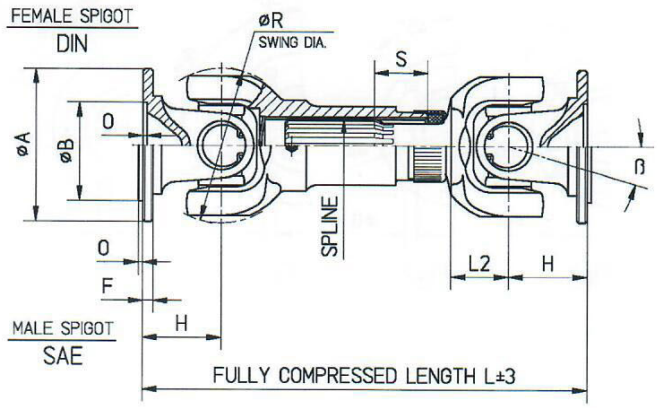


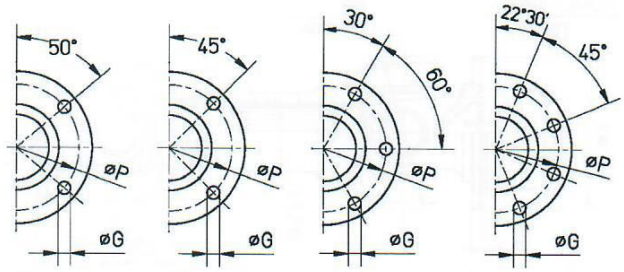


**KAT-70/Y2** **13/01/2009**

| SERIE BAUGR SERI | CATALOGUE NO KATALOG NR KATALOG NO | FIG | A | B | F | H | L2 | L | O | P | R | S | ß° | CONNECTION ANSCHLUSS A,TYPExExG | SPLINE |
|---|---|---|---|---|---|---|---|---|---|---|---|---|---|---|---|
| 1310 | 70.131.601 | DIN,2 | 90 | 47,0 | 6,7 | 50 | 40 | 276 | 2,5 | 74,5 | 97 | 35 | 20 | 90 DINx4x8,1 | SAE 1 3/8"x16C |
| | 70.131.611 | DIN,3 | 90 | 47,0 | 6,8 | 50 | 40 | 276 | 2,5 | 74,5 | 97 | 35 | 20 | 90 DINx6x8,1 | SAE 1 3/8"x16C |
| | 70.131.621 | DIN,3 | 90 | 47,0 | 6,7 | 50 | 40 | 276 | 2,5 | 74,5 | 97 | 35 | 20 | 90 DINx6x10,2 | SAE 1 3/8"x16C |
| | 70.131.631 | DIN,3 | 100 | 57,0 | 6,7 | 53 | 40 | 282 | 2,5 | 84,0 | 97 | 35 | 20 | 100 DINx6x8,1 | SAE 1 3/8"x16C |
| | 70.131.641 | DIN,2 | 100 | 57,0 | 6,7 | 53 | 40 | 282 | 2,5 | 84,0 | 97 | 35 | 20 | 100 DINx4x8,1 | SAE 1 3/8"x16C |
| | 70.131.651 | DIN,4 | 120 | 75,0 | 8,0 | 52 | 40 | 280 | 2,5 | 101,5 | 97 | 35 | 20 | 120 DINx8x10,2 | SAE 1 3/8"x16C |
| | 70.131.801 | SAE,1 | 97 | 60,3 | 6,7 | 35 | 40 | 246 | 1,4 | 79,4 | 97 | 35 | 20 | 97 SAEx4x9,7 | SAE 1 3/8"x16C |
| | 70.131.811 | SAE,1 | 97 | 60,3 | 6,7 | 35 | 40 | 246 | 1,4 | 76,3 | 97 | 35 | 20 | 97 SAEx4x10,2 | SAE 1 3/8"x16C |
| | 70.131.821 | SAE,1 | 92 | 57,1 | 6,7 | 35 | 40 | 246 | 1,4 | 76,2 | 97 | 35 | 20 | 92 SAEx4x9,7 | SAE 1 3/8"x16C |
| | 70.131.831 | SAE,1 | 114 | 69,8 | 8,2 | 35 | 40 | 246 | 1,4 | 95,3 | 97 | 35 | 20 | 114 SAEx4x11,3 | SAE 1 3/8"x16C |
| | 70.131.841 | SAE,1 | 114,5 | 69,8 | 8,2 | 35 | 40 | 246 | 1,4 | 95,3 | 97 | 35 | 20 | 114 SAEx4x12,2 | SAE 1 3/8"x16C |
| | 70.131.602 | DIN,2 | 90 | 47,0 | 6,7 | 50 | 44 | 292 | 2,5 | 74,5 | 97 | 58 | 20 | 90 DINx4x8,1 | SAE 1 3/8"x16C |
| | 70.131.612 | DIN,3 | 90 | 47,0 | 6,8 | 50 | 44 | 292 | 2,5 | 74,5 | 97 | 58 | 20 | 90 DINx6x8,1 | SAE 1 3/8"x16C |
| | 70.131.622 | DIN,3 | 90 | 47,0 | 6,7 | 50 | 44 | 292 | 2,5 | 74,5 | 97 | 58 | 20 | 90 DINx6x10,2 | SAE 1 3/8"x16C |
| | 70.131.632 | DIN,3 | 100 | 57,0 | 6,7 | 53 | 44 | 298 | 2,5 | 84,0 | 97 | 58 | 20 | 100 DINx6x8,1 | SAE 1 3/8"x16C |
| | 70.131.642 | DIN,2 | 100 | 57,0 | 6,7 | 53 | 44 | 298 | 2,5 | 84,0 | 97 | 58 | 20 | 100 DINx4x8,1 | SAE 1 3/8"x16C |
| | 70.131.652 | DIN,4 | 120 | 75,0 | 8,0 | 52 | 44 | 294 | 2,5 | 101,5 | 97 | 55 | 20 | 120 DINx8x10,2 | SAE 1 3/8"x16C |
| | 70.131.802 | SAE,1 | 97 | 60,3 | 6,7 | 35 | 44 | 262 | 1,4 | 79,4 | 97 | 58 | 20 | 97 SAEx4x9,7 | SAE 1 3/8"x16C |
| | 70.131.812 | SAE,1 | 97 | 60,3 | 6,7 | 35 | 44 | 262 | 1,4 | 79,4 | 97 | 58 | 20 | 97 SAEx4x10,2 | SAE 1 3/8"x16C |
| | 70.131.822 | SAE,1 | 92 | 57,1 | 6,7 | 35 | 44 | 262 | 1,4 | 76,2 | 97 | 58 | 20 | 92 SAEx4x9,7 | SAE 1 3/8"x16C |
| | 70.131.832 | SAE,1 | 114 | 69,8 | 8,2 | 35 | 44 | 262 | 1,4 | 95,3 | 97 | 58 | 20 | 114 SAEx4x11,3 | SAE 1 3/8"x16C |
| | 70.131.842 | SAE,1 | 114,5 | 69,8 | 8,2 | 35 | 44 | 262 | 1,4 | 95,3 | 97 | 58 | 20 | 114 SAEx4x12,2 | SAE 1 3/8"x16C |
| | 70.131.603 | DIN,2 | 90 | 47,0 | 6,7 | 50 | 44 | 322 | 2,5 | 74,5 | 97 | 55 | 20 | 90 DINx4x8,1 | SAE 1 3/8"x16C |
| | 70.131.613 | DIN,3 | 90 | 47,0 | 6,8 | 50 | 44 | 322 | 2,5 | 74,5 | 97 | 55 | 20 | 90 DINx6x8,1 | SAE 1 3/8"x16C |
| | 70.131.623 | DIN,3 | 90 | 47,0 | 6,7 | 50 | 44 | 322 | 2,5 | 74,5 | 97 | 55 | 20 | 90 DINx6x10,2 | SAE 1 3/8"x16C |
| | 70.131.633 | DIN,3 | 100 | 57,0 | 6,7 | 53 | 44 | 328 | 2,5 | 84,0 | 97 | 55 | 20 | 100 DINx6x8,1 | SAE 1 3/8"x16C |
| | 70.131.643 | DIN,2 | 100 | 57,0 | 6,7 | 53 | 44 | 326 | 2,5 | 84,0 | 97 | 55 | 20 | 100 DINx4x8,1 | SAE 1 3/8"x16C |
| | 70.131.653 | DIN,4 | 120 | 75,0 | 8,0 | 52 | 44 | 324 | 2,5 | 101,5 | 97 | 55 | 20 | 120 DINx8x10,2 | SAE 1 3/8"x16C |
| | 70.131.803 | SAE,1 | 97 | 60,3 | 6,7 | 35 | 44 | 292 | 1,4 | 79,4 | 97 | 55 | 20 | 97 SAEx4x9,7 | SAE 1 3/8"x16C |
| | 70.131.813 | SAE,1 | 97 | 60,3 | 6,7 | 35 | 44 | 292 | 1,4 | 76,3 | 97 | 55 | 20 | 97 SAEx4x10,2 | SAE 1 3/8"x16C |
| | 70.131.823 | SAE,1 | 92 | 57,1 | 6,7 | 35 | 44 | 292 | 1,4 | 76,2 | 97 | 55 | 20 | 92 SAEx4x9,7 | SAE 1 3/8"x16C |
| | 70.131.833 | SAE,1 | 114 | 69,8 | 8,2 | 35 | 44 | 292 | 1,4 | 95,3 | 97 | 55 | 20 | 114 SAEx4x11,3 | SAE 1 3/8"x16C |
| | 70.131.843 | SAE,1 | 114,5 | 69,8 | 8,2 | 35 | 44 | 292 | 1,4 | 95,3 | 97 | 55 | 20 | 114 SAEx4x12,2 | SAE 1 3/8"x16C |
| | 70.131.604 | DIN,2 | 90 | 47,0 | 6,7 | 50 | 40 | 300 | 2,5 | 74,5 | 97 | 55 | 20 | 90 DINx4x8,1 | SAE 1 3/8"x16C |
| | 70.131.614 | DIN,3 | 90 | 47,0 | 6,8 | 50 | 40 | 300 | 2,5 | 74,5 | 97 | 55 | 20 | 90 DINx6x8,1 | SAE 1 3/8"x16C |
| | 70.131.624 | DIN,3 | 90 | 47,0 | 6,7 | 50 | 40 | 300 | 2,5 | 74,5 | 97 | 55 | 20 | 90 DINx6x10,2 | SAE 1 3/8"x16C |
| | 70.131.634 | DIN,3 | 100 | 57,0 | 6,7 | 53 | 40 | 306 | 2,5 | 84,0 | 97 | 55 | 20 | 100 DINx6x8,1 | SAE 1 3/8"x16C |
| | 70.131.644 | DIN,2 | 100 | 57,0 | 6,7 | 53 | 40 | 306 | 2,5 | 84,0 | 97 | 55 | 20 | 100 DINx4x8,1 | SAE 1 3/8"x16C |
| | 70.131.654 | DIN,4 | 120 | 75,0 | 8,0 | 52 | 40 | 304 | 2,5 | 101,5 | 97 | 55 | 20 | 120 DINx8x10,2 | SAE 1 3/8"x16C |
| | 70.131.804 | SAE,1 | 97 | 60,3 | 6,7 | 35 | 40 | 270 | 1,4 | 79,4 | 97 | 55 | 20 | 97 SAEx4x9,7 | SAE 1 3/8"x16C |
| | 70.131.814 | SAE,1 | 97 | 60,3 | 6,7 | 35 | 40 | 270 | 1,4 | 76,3 | 97 | 55 | 20 | 97 SAEx4x10,2 | SAE 1 3/8"x16C |
| | 70.131.824 | SAE,1 | 92 | 57,1 | 6,7 | 35 | 40 | 270 | 1,4 | 76,2 | 97 | 55 | 20 | 92 SAEx4x9,7 | SAE 1 3/8"x16C |
| | 70.131.834 | SAE,1 | 114 | 69,8 | 8,2 | 35 | 40 | 270 | 1,4 | 95,3 | 97 | 55 | 20 | 114 SAEx4x11,3 | SAE 1 3/8"x16C |
| | 70.131.844 | SAE,1 | 114,5 | 69,8 | 8,2 | 35 | 40 | 270 | 1,4 | 95,3 | 97 | 55 | 20 | 114 SAEx4x12,2 | SAE 1 3/8"x16C |

E= NUMBER OF HOLES / LOCHANZAHL / DELİK SAYISI
ß= JOINT ANGLE / BEUGEWINKEL / MAFSAL AÇISI
O= SPIGIT DEPTH / ZENTRIERBOHRUNGTIEFE / SPİGOT DERİNLİĞİ

# UZMANKARDAN

## 70 PROPELLER SHAFTS WITH SLIDING MOVEMENT, SHORT DESIGN / G.WELLEN MIT LAENGENAUSGLEICH, KURZAUSFÜHRUNG / KAYICILI ŞAFTLAR, KISA TİP

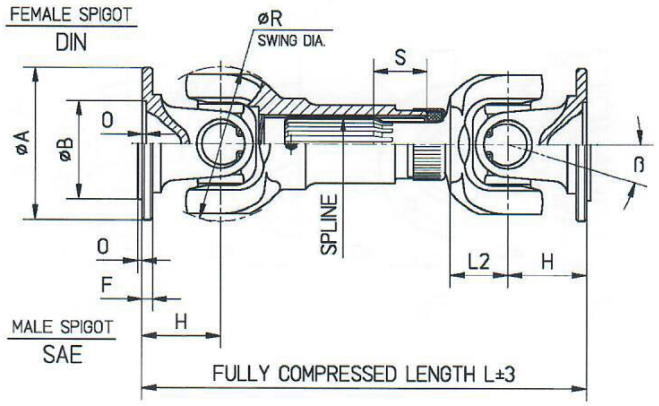


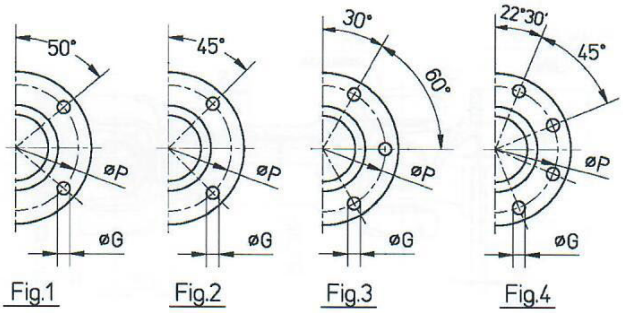


**KAT-70/Y3** **13/01/2009**

| SERIE BAUGR SERI | CATALOGUE NO KATALOG NR KATALOG NO | FIG | A | B | F | H | L2 | L | O | P | R | S | ß° | CONNECTION ANSCHLUSS A,TYPExExG | SPLINE |
|---|---|---|---|---|---|---|---|---|---|---|---|---|---|---|---|
| | 70.131.605 | DIN,2 | 90 | 47,0 | 6,7 | 50 | 38 | 241 | 2,5 | 74,5 | 97 | 30 | 20 | 90 DINx4x8,1 | SAE 1 3/8"x16C |
| | 70.131.615 | DIN,3 | 90 | 47,0 | 6,8 | 50 | 38 | 241 | 2,5 | 74,5 | 97 | 30 | 20 | 90 DINx6x8,1 | SAE 1 3/8"x16C |
| | 70.131.625 | DIN,3 | 90 | 47,0 | 6,7 | 50 | 38 | 241 | 2,5 | 74,5 | 97 | 30 | 20 | 90 DINx6x10,2 | SAE 1 3/8"x16C |
| | 70.131.635 | DIN,3 | 100 | 57,0 | 6,7 | 53 | 38 | 247 | 2,5 | 84,0 | 97 | 30 | 20 | 100 DINx6x8,1 | SAE 1 3/8"x16C |
| | 70.131.645 | DIN,2 | 100 | 57,0 | 6,7 | 53 | 38 | 247 | 2,5 | 84,0 | 97 | 30 | 20 | 100 DINx4x8,1 | SAE 1 3/8"x16C |
| 1310 | 70.131.655 | DIN,4 | 120 | 75,0 | 8,0 | 52 | 38 | 245 | 2,5 | 101,5 | 97 | 30 | 20 | 120 DINx8x10,2 | SAE 1 3/8"x16C |
| | 70.131.805 | SAE,1 | 97 | 60,3 | 6,7 | 35 | 38 | 211 | 1,4 | 79,4 | 97 | 30 | 20 | 97 SAEx4x9,7 | SAE 1 3/8"x16C |
| | 70.131.815 | SAE,1 | 97 | 60,3 | 6,7 | 35 | 38 | 211 | 1,4 | 76,3 | 97 | 30 | 20 | 97 SAEx4x10,2 | SAE 1 3/8"x16C |
| | 70.131.825 | SAE,1 | 92 | 57,1 | 6,7 | 35 | 38 | 211 | 1,4 | 76,2 | 97 | 30 | 20 | 92 SAEx4x9,7 | SAE 1 3/8"x16C |
| | 70.131.835 | SAE,1 | 114 | 69,8 | 8,2 | 35 | 38 | 211 | 1,4 | 95,3 | 97 | 30 | 20 | 114 SAEx4x11,3 | SAE 1 3/8"x16C |
| | 70.131.845 | SAE,1 | 114,5 | 69,8 | 8,2 | 35 | 38 | 211 | 1,4 | 95,3 | 97 | 30 | 20 | 114 SAEx4x12,2 | SAE 1 3/8"x16C |
| | 70.141.600 | DIN,4 | 120 | 75,0 | 8,0 | 56 | 42 | 267 | 3,0 | 101,5 | 122 | 20 | 20 | 124 DINx8x10,2 | SAE 1 1/2"x16C * |
| | 70.141.610 | DIN,4 | 120 | 75,0 | 8,0 | 56 | 42 | 267 | 3,0 | 101,5 | 122 | 20 | 20 | 124 DINx8x8,1 | SAE 1 1/2"x16C * |
| | 70.141.620 | DIN,3 | 100 | 57,0 | 8,0 | 70 | 42 | 295 | 3,0 | 84,0 | 122 | 20 | 20 | 104 DINx6x8,1 | SAE 1 1/2"x16C * |
| | 70.141.800 | SAE,1 | 114 | 69,8 | 7,5 | 43 | 42 | 241 | 1,4 | 95,3 | 122 | 20 | 20 | 118 SAEx4x11,3 | SAE 1 1/2"x16C * |
| | 70.141.810 | SAE,1 | 114 | 69,8 | 7,5 | 43 | 42 | 241 | 1,4 | 95,3 | 122 | 20 | 20 | 118 SAEx4x12,2 | SAE 1 1/2"x16C * |
| | 70.141.820 | SAE,1 | 146 | 95,2 | 11,5 | 50,8 | 42 | 257 | 1,5 | 120,6 | 122 | 20 | 20 | 150 SAEx4x12,9 | SAE 1 1/2"x16C * |
| | 70.141.830 | SAE,1 | 146 | 95,2 | 11,5 | 50,8 | 42 | 257 | 1,5 | 120,6 | 122 | 20 | 20 | 150 SAEx4x14,2 | SAE 1 1/2"x16C * |
| | 70.141.602 | DIN,4 | 120 | 75,0 | 8,0 | 56 | 42 | 287 | 3,0 | 101,5 | 122 | 43 | 20 | 122 DINx8x10,2 | SAE 1 1/2"x16C * |
| | 70.141.612 | DIN,4 | 120 | 75,0 | 8,0 | 56 | 42 | 287 | 3,0 | 101,5 | 122 | 43 | 20 | 122 DINx8x8,1 | SAE 1 1/2"x16C * |
| | 70.141.622 | DIN,3 | 100 | 57,0 | 8,0 | 70 | 42 | 315 | 3,0 | 84,0 | 122 | 43 | 20 | 102 DINx6x8,1 | SAE 1 1/2"x16C * |
| | 70.141.802 | SAE,1 | 114 | 69,8 | 7,5 | 43 | 42 | 261 | 1,4 | 95,3 | 122 | 43 | 20 | 116 SAEx4x11,3 | SAE 1 1/2"x16C * |
| | 70.141.812 | SAE,1 | 114 | 69,8 | 7,5 | 43 | 42 | 261 | 1,4 | 95,3 | 122 | 43 | 20 | 116 SAEx4x12,2 | SAE 1 1/2"x16C * |
| | 70.141.822 | SAE,1 | 146 | 95,2 | 11,5 | 50,8 | 42 | 277 | 1,5 | 120,6 | 122 | 43 | 20 | 148 SAEx4x12,9 | SAE 1 1/2"x16C * |
| | 70.141.832 | SAE,1 | 146 | 95,2 | 11,5 | 50,8 | 42 | 277 | 1,5 | 120,6 | 122 | 43 | 20 | 148 SAEx4x14,2 | SAE 1 1/2"x16C * |
| | 70.141.605 | DIN,4 | 120 | 75,0 | 8,0 | 56 | 42 | 359 | 3,0 | 101,5 | 122 | 55 | 20 | 120 DINx8x10,2 | SAE 1 1/2"x16C * |
| | 70.141.615 | DIN,4 | 120 | 75,0 | 8,0 | 56 | 42 | 359 | 3,0 | 101,5 | 122 | 55 | 20 | 120 DINx8x8,1 | SAE 1 1/2"x16C * |
| | 70.141.625 | DIN,3 | 100 | 57,0 | 8,0 | 70 | 42 | 387 | 3,0 | 84,0 | 122 | 55 | 20 | 100 DINx6x8,1 | SAE 1 1/2"x16C * |
| 1410 | 70.141.805 | SAE,1 | 114 | 69,8 | 7,5 | 43 | 42 | 333 | 1,4 | 95,3 | 122 | 55 | 20 | 114 SAEx4x11,3 | SAE 1 1/2"x16C * |
| | 70.141.815 | SAE,1 | 114 | 69,8 | 7,5 | 43 | 42 | 333 | 1,4 | 95,3 | 122 | 55 | 20 | 114 SAEx4x12,2 | SAE 1 1/2"x16C * |
| | 70.141.825 | SAE,1 | 146 | 95,2 | 11,5 | 50,8 | 42 | 349 | 1,5 | 120,6 | 122 | 55 | 20 | 146 SAEx4x12,9 | SAE 1 1/2"x16C * |
| | 70.141.835 | SAE,1 | 146 | 95,2 | 11,5 | 50,8 | 42 | 349 | 1,5 | 120,6 | 122 | 55 | 20 | 146 SAEx4x14,2 | SAE 1 1/2"x16C * |
| | 70.141.607 | DIN,4 | 120 | 75,0 | 8,0 | 56 | 47 | 333 | 3,0 | 101,5 | 122 | 55 | 20 | 121 DINx8x10,2 | SAE 1 1/2"x16C * |
| | 70.141.617 | DIN,4 | 120 | 75,0 | 8,0 | 56 | 47 | 333 | 3,0 | 101,5 | 122 | 55 | 20 | 121 DINx8x8,1 | SAE 1 1/2"x16C * |
| | 70.141.627 | DIN,3 | 100 | 57,0 | 8,0 | 70 | 47 | 361 | 3,0 | 84,0 | 122 | 55 | 20 | 101 DINx6x8,1 | SAE 1 1/2"x16C * |
| | 70.141.807 | SAE,1 | 114 | 69,8 | 7,5 | 43 | 47 | 307 | 1,4 | 95,3 | 122 | 55 | 20 | 115 SAEx4x11,3 | SAE 1 1/2"x16C * |
| | 70.141.817 | SAE,1 | 114 | 69,8 | 7,5 | 43 | 47 | 307 | 1,4 | 95,3 | 122 | 55 | 20 | 115 SAEx4x12,2 | SAE 1 1/2"x16C * |
| | 70.141.827 | SAE,1 | 146 | 95,2 | 11,5 | 50,8 | 47 | 323 | 1,5 | 120,6 | 122 | 55 | 20 | 147 SAEx4x12,9 | SAE 1 1/2"x16C * |
| | 70.141.837 | SAE,1 | 146 | 95,2 | 11,5 | 50,8 | 47 | 323 | 1,5 | 120,6 | 122 | 55 | 20 | 147 SAEx4x14,2 | SAE 1 1/2"x16C * |
| | 70.141.608 | DIN,4 | 120 | 75,0 | 8,0 | 56 | 42 | 306 | 3,0 | 101,5 | 122 | 40 | 20 | 123 DINx8x10,2 | SAE 1 1/2"x16C * |
| | 70.141.618 | DIN,4 | 120 | 75,0 | 8,0 | 56 | 42 | 306 | 3,0 | 101,5 | 122 | 40 | 20 | 123 DINx8x8,1 | SAE 1 1/2"x16C * |
| | 70.141.628 | DIN,3 | 100 | 57,0 | 8,0 | 70 | 42 | 334 | 3,0 | 84,0 | 122 | 40 | 20 | 103 DINx6x8,1 | SAE 1 1/2"x16C * |
| | 70.141.808 | SAE,1 | 114 | 69,8 | 7,5 | 43 | 42 | 280 | 1,4 | 95,3 | 122 | 40 | 20 | 117 SAEx4x11,3 | SAE 1 1/2"x16C * |
| | 70.141.818 | SAE,1 | 114 | 69,8 | 7,5 | 43 | 42 | 280 | 1,4 | 95,3 | 122 | 40 | 20 | 117 SAEx4x12,2 | SAE 1 1/2"x16C * |
| | 70.141.828 | SAE,1 | 146 | 95,2 | 11,5 | 50,8 | 42 | 296 | 1,5 | 120,6 | 122 | 40 | 20 | 149 SAEx4x12,9 | SAE 1 1/2"x16C * |
| | 70.141.838 | SAE,1 | 146 | 95,2 | 11,5 | 50,8 | 42 | 296 | 1,5 | 120,6 | 122 | 40 | 20 | 149 SAEx4x14,2 | SAE 1 1/2"x16C * |

E= NUMBER OF HOLES / LOCHANZAHL / DELİK SAYISI
ß= JOINT ANGLE / BEUGEWINKEL / MAFSAL AÇISI
O= SPIGIT DEPTH / ZENTRIERBOHRUNGTIEFE / SPİGOT DERİNLİĞİ

# UZMANKARDAN

## PROPELLER SHAFTS WITH SLIDING MOVEMENT, SHORT DESIGN / G.WELLEN MIT LAENGENAUSGLEICH, KURZAUSFÜHRUNG / KAYICILI ŞAFTLAR, KISA TİP



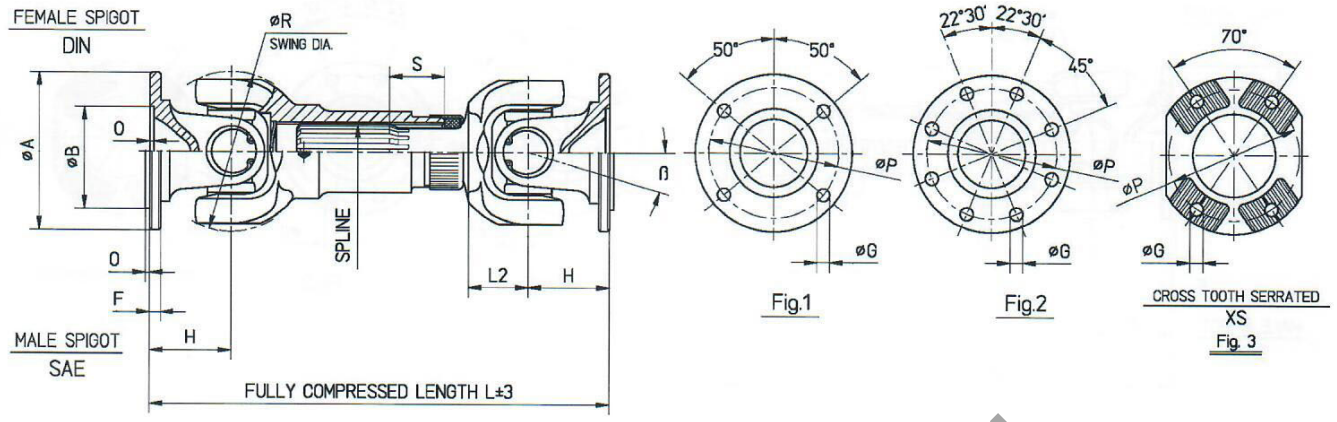


**KAT-70/Y4** **14/01/2009**

| SERIE BAUGR SERI | CATALOGUE NO KATALOG NR KATALOG NO | FIG | A | B | F | H | L2 | L | O | P | R | S | ß° | CONNECTION ANSCHLUSS A,TYPExExG | SPLINE |
|---|---|---|---|---|---|---|---|---|---|---|---|---|---|---|---|
| 1480 | 70.148.600 | DIN,2 | 120 | 75,0 | 8,5 | 65 | 45 | 361 | 2,5 | 101,5 | 122 | 68 | 22 | 120 DINx8x8,2 | SAE 1 3/4"x16C * |
| | 70.148.601 | DIN,2 | 120 | 75,0 | 8,5 | 65 | 45 | 361 | 2,5 | 101,5 | 122 | 68 | 22 | 120 DINx8x10,2 | SAE 1 3/4"x16C * |
| | 70.148.800 | SAE,1 | 116 | 69,8 | 9,0 | 65 | 45 | 361 | 1,4 | 95,3 | 122 | 68 | 22 | 116 SAEx4x12,2 | SAE 1 3/4"x16C * |
| | 70.148.801 | SAE,1 | 146 | 95,2 | 9,0 | 50,8 | 45 | 333 | 1,5 | 120,6 | 122 | 68 | 22 | 146 SAEx4x12,9 | SAE 1 3/4"x16C * |
| | 70.148.802 | SAE,1 | 146 | 95,2 | 9,0 | 50,8 | 45 | 333 | 1,5 | 120,6 | 122 | 68 | 22 | 146 SAEx4x14,2 | SAE 1 3/4"x16C * |
| | 70.148.700 | XS,3 | 120 | - | 16,5 | 63,5 | 45 | 358 | - | 100,0 | 122 | 68 | 17 | 120 XSx4x11,1 | SAE 1 3/4"x16C * |
| | 70.148.610 | DIN,2 | 120 | 75,0 | 8,5 | 65 | 45 | 349 | 2,5 | 101,5 | 122 | 63 | 22 | 125 DINx8x8,2 | SAE 1 3/4"x16C * |
| | 70.148.611 | DIN,2 | 120 | 75,0 | 8,5 | 65 | 45 | 349 | 2,5 | 101,5 | 122 | 63 | 22 | 125 DINx8x10,2 | SAE 1 3/4"x16C * |
| | 70.148.810 | SAE,1 | 116 | 69,8 | 9,0 | 65 | 45 | 349 | 1,4 | 95,3 | 122 | 63 | 22 | 121 SAEx4x12,2 | SAE 1 3/4"x16C * |
| | 70.148.811 | SAE,1 | 146 | 95,2 | 9,0 | 50,8 | 45 | 320 | 1,5 | 120,6 | 122 | 63 | 22 | 151 SAEx4x12,9 | SAE 1 3/4"x16C * |
| | 70.148.812 | SAE,1 | 146 | 95,2 | 9,0 | 50,8 | 45 | 320 | 1,5 | 120,6 | 122 | 63 | 22 | 151 SAEx4x14,2 | SAE 1 3/4"x16C * |
| | 70.148.710 | XS,3 | 120 | - | 16,5 | 63,5 | 45 | 346 | - | 100,0 | 122 | 63 | 17 | 125 XSx4x11,1 | SAE 1 3/4"x16C * |
| | 70.148.620 | DIN,2 | 120 | 75,0 | 8,5 | 65 | 45 | 344 | 2,5 | 101,5 | 122 | 50 | 22 | 122 DINx8x8,2 | SAE 1 3/4"x16C * |
| | 70.148.621 | DIN,2 | 120 | 75,0 | 8,5 | 65 | 45 | 344 | 2,5 | 101,5 | 122 | 50 | 22 | 122 DINx8x10,2 | SAE 1 3/4"x16C * |
| | 70.148.820 | SAE,1 | 116 | 69,8 | 9,0 | 65 | 45 | 344 | 1,4 | 95,3 | 122 | 50 | 22 | 118 SAEx4x12,2 | SAE 1 3/4"x16C * |
| | 70.148.821 | SAE,1 | 146 | 95,2 | 9,0 | 50,8 | 45 | 316 | 1,5 | 120,6 | 122 | 50 | 22 | 148 SAEx4x12,9 | SAE 1 3/4"x16C * |
| | 70.148.822 | SAE,1 | 146 | 95,2 | 9,0 | 50,8 | 45 | 316 | 1,5 | 120,6 | 122 | 50 | 22 | 148 SAEx4x14,2 | SAE 1 3/4"x16C * |
| | 70.148.720 | XS,3 | 120 | - | 16,5 | 63,5 | 45 | 341 | - | 100,0 | 122 | 50 | 17 | 122 XSx4x11,1 | SAE 1 3/4"x16C * |
| | 70.148.640 | DIN,2 | 120 | 75,0 | 8,5 | 65 | 45 | 330 | 2,5 | 101,5 | 122 | 46 | 22 | 124 DINx8x8,2 | SAE 1 3/4"x16C * |
| | 70.148.641 | DIN,2 | 120 | 75,0 | 8,5 | 65 | 45 | 330 | 2,5 | 101,5 | 122 | 46 | 22 | 124 DINx8x10,2 | SAE 1 3/4"x16C * |
| | 70.148.840 | SAE,1 | 116 | 69,8 | 9,0 | 65 | 45 | 330 | 1,4 | 95,3 | 122 | 46 | 22 | 120 SAEx4x12,2 | SAE 1 3/4"x16C * |
| | 70.148.841 | SAE,1 | 146 | 95,2 | 9,0 | 50,8 | 45 | 301 | 1,5 | 120,6 | 122 | 46 | 22 | 150 SAEx4x12,9 | SAE 1 3/4"x16C * |
| | 70.148.842 | SAE,1 | 146 | 95,2 | 9,0 | 50,8 | 45 | 301 | 1,5 | 120,6 | 122 | 46 | 22 | 150 SAEx4x14,2 | SAE 1 3/4"x16C * |
| | 70.148.740 | XS,3 | 120 | - | 16,5 | 63,5 | 45 | 327 | - | 100,0 | 122 | 46 | 17 | 124 XSx4x11,1 | SAE 1 3/4"x16C * |
| | 70.148.650 | DIN,2 | 120 | 75,0 | 8,5 | 65 | 42 | 322 | 2,5 | 101,5 | 122 | 46 | 22 | 120 DINx8x8,2 | SAE 1 3/4"x16C * |
| | 70.148.651 | DIN,2 | 120 | 75,0 | 8,5 | 65 | 42 | 322 | 2,5 | 101,5 | 122 | 46 | 22 | 120 DINx8x10,2 | SAE 1 3/4"x16C * |
| | 70.148.850 | SAE,1 | 116 | 69,8 | 9,0 | 65 | 42 | 322 | 1,4 | 95,3 | 122 | 46 | 22 | 116 SAEx4x12,2 | SAE 1 3/4"x16C * |
| | 70.148.851 | SAE,1 | 146 | 95,2 | 9,0 | 50,8 | 42 | 293 | 1,5 | 120,6 | 122 | 46 | 22 | 146 SAEx4x12,9 | SAE 1 3/4"x16C * |
| | 70.148.852 | SAE,1 | 146 | 95,2 | 9,0 | 50,8 | 42 | 293 | 1,5 | 120,6 | 122 | 46 | 22 | 146 SAEx4x14,2 | SAE 1 3/4"x16C * |
| | 70.148.750 | XS,3 | 120 | - | 16,5 | 63,5 | 42 | 319 | - | 100,0 | 122 | 46 | 17 | 120 XSx4x11,1 | SAE 1 3/4"x16C * |
| | 70.148.660 | DIN,2 | 120 | 75,0 | 8,5 | 65 | 42 | 296 | 2,5 | 101,5 | 122 | 46 | 22 | 124 DINx8x8,2 | SAE 1 3/4"x16C * |
| | 70.148.661 | DIN,2 | 120 | 75,0 | 8,5 | 65 | 42 | 296 | 2,5 | 101,5 | 122 | 46 | 22 | 124 DINx8x10,2 | SAE 1 3/4"x16C * |
| | 70.148.860 | SAE,1 | 116 | 69,8 | 9,0 | 65 | 42 | 296 | 1,4 | 95,3 | 122 | 46 | 22 | 120 SAEx4x12,2 | SAE 1 3/4"x16C * |
| | 70.148.861 | SAE,1 | 146 | 95,2 | 9,0 | 50,8 | 42 | 267 | 1,5 | 120,6 | 122 | 46 | 22 | 150 SAEx4x12,9 | SAE 1 3/4"x16C * |
| | 70.148.862 | SAE,1 | 146 | 95,2 | 9,0 | 50,8 | 42 | 267 | 1,5 | 120,6 | 122 | 46 | 22 | 150 SAEx4x14,2 | SAE 1 3/4"x16C * |
| | 70.148.760 | XS,3 | 120 | - | 16,5 | 63,5 | 42 | 293 | - | 100,0 | 122 | 46 | 17 | 124 XSx4x11,1 | SAE 1 3/4"x16C * |
| 1510 | 70.151.600 | DIN,2 | 120,0 | 75,0 | 8,0 | 75,0 | 60 | 348 | 3,0 | 101,5 | 136 | 35 | 20 | 120 DINx8x10,2 | SAE 1 3/4"x16C |
| | 70.151.630 | DIN,2 | 150,0 | 90,0 | 11,0 | 90,0 | 60 | 378 | 3,4 | 130,0 | 136 | 35 | 20 | 150 DINx8x12,2 | SAE 1 3/4"x16C |
| | 70.151.640 | DIN,2 | 150,0 | 90,0 | 11,0 | 90,0 | 60 | 378 | 3,4 | 130,0 | 136 | 35 | 20 | 150 DINx8x10,2 | SAE 1 3/4"x16C |
| | 70.151.660 | DIN,2 | 165,0 | 95,0 | 11,0 | 90,0 | 60 | 378 | 3,4 | 140,0 | 136 | 35 | 20 | 165 DINx8x16,2 | SAE 1 3/4"x16C |
| | 70.151.670 | DIN,2 | 120,0 | 75,0 | 8,0 | 75,0 | 60 | 348 | 3,0 | 101,5 | 136 | 35 | 20 | 120 DINx8x8,2 | SAE 1 3/4"x16C |
| | 70.151.800 | SAE,1 | 146,0 | 95,2 | 9,0 | 63,5 | 60 | 325 | 1,8 | 120,6 | 136 | 35 | 20 | 146 SAEx4x12,9 | SAE 1 3/4"x16C |
| | 70.151.810 | SAE,1 | 146,0 | 95,2 | 9,0 | 63,5 | 60 | 325 | 1,8 | 120,6 | 136 | 35 | 20 | 146 SAEx4x14,3 | SAE 1 3/4"x16C |
| | 70.151.700 | XS,3 | 120,0 | - | 15 | 70,0 | 60 | 338 | - | 100,0 | 136 | 35 | 20 | 120 XSx4x11,1 | SAE 1 3/4"x16C |

E= NUMBER OF HOLES / LOCHANZAHL / DELİK SAYISI
ß= JOINT ANGLE / BEUGEWINKEL / MAFSAL AÇISI
O= SPIGIT DEPTH / ZENTRIERBOHRUNGTIEFE / SPİGOT DERİNLİĞİ
(*) YOKE SHAFT RILSAN COATED / GABELWELLE RILSAN BESCHICHTET / ÇATALLI MİL RILSAN KAPLI

# UZMANKARDAN

## 72 PROPELLER SHAFTS WITH SLIDING MOVEMENT, SHORT DESIGN / G.WELLEN MIT LAENGENAUSGLEICH, KURZAUSFÜHRUNG / KAYICILI ŞAFTLAR, KISA TİP

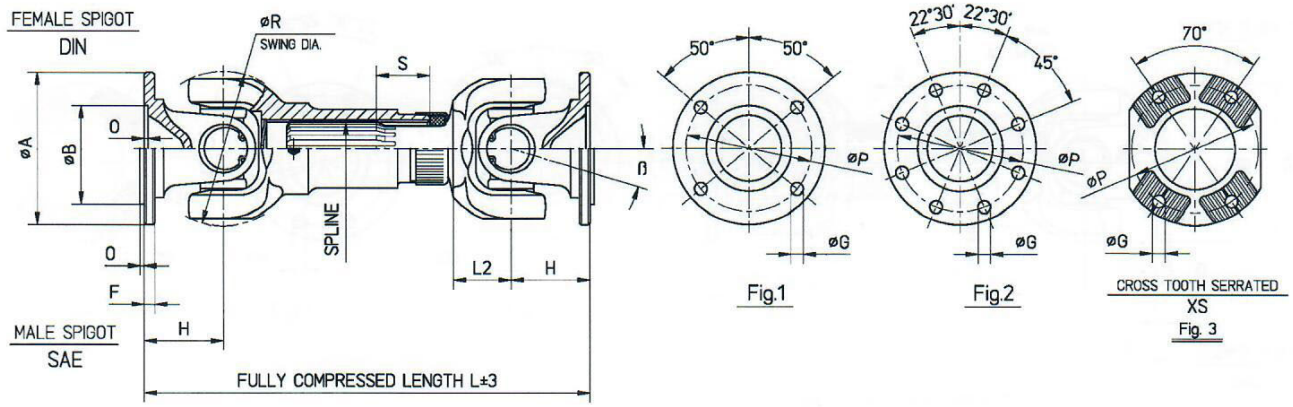


**KAT-70/Y5** **14/01/2009**

| SERIE BAUGR SERI | CATALOGUE NO KATALOG NR KATALOG NO | FIG | A | B | F | H | L2 | L | O | P | R | S | ß° | CONNECTION ANSCHLUSS A,TYPExExG | SPLINE |
|---|---|---|---|---|---|---|---|---|---|---|---|---|---|---|---|
| 1510 | 70.151.601 | DIN,2 | 120,0 | 75,0 | 8,0 | 75,0 | 60 | 357 | 3,0 | 101,5 | 136 | 35 | 20 | 120 DINx8x10,2 | SAE 1 3/4"x16C |
| | 70.151.631 | DIN,2 | 150,0 | 90,0 | 11,0 | 90,0 | 60 | 387 | 3,4 | 130,0 | 136 | 35 | 20 | 150 DINx8x12,2 | SAE 1 3/4"x16C |
| | 70.151.641 | DIN,2 | 150,0 | 90,0 | 11,0 | 90,0 | 60 | 387 | 3,4 | 130,0 | 136 | 35 | 20 | 150 DINx8x10,2 | SAE 1 3/4"x16C |
| | 70.151.661 | DIN,2 | 165,0 | 95,0 | 11,0 | 90,0 | 60 | 390 | 3,4 | 140,0 | 136 | 35 | 20 | 165 DINx8x16,2 | SAE 1 3/4"x16C |
| | 70.151.671 | DIN,2 | 120,0 | 75,0 | 8,0 | 75,0 | 60 | 357 | 3,0 | 101,5 | 136 | 35 | 20 | 120 DINx8x8,2 | SAE 1 3/4"x16C |
| | 70.151.801 | SAE,1 | 146,0 | 95,2 | 9,0 | 63,5 | 60 | 334 | 1,8 | 120,6 | 136 | 35 | 20 | 146 SAEx4x12,9 | SAE 1 3/4"x16C |
| | 70.151.811 | SAE,1 | 146,0 | 95,2 | 9,0 | 63,5 | 60 | 334 | 1,8 | 120,6 | 136 | 35 | 20 | 146 SAEx4x14,3 | SAE 1 3/4"x16C |
| | 70.151.701 | XS,3 | 120,0 | - | 15 | 70,0 | 60 | 347 | - | 100,0 | 136 | 35 | 20 | 120 XSx4x11,1 | SAE 1 3/4"x16C |
| | 70.151.603 | DIN,2 | 120,0 | 75,0 | 8,0 | 75,0 | 56 | 372 | 3,0 | 101,5 | 136 | 40 | 20 | 120 DINx8x10,2 | SAE 1 3/4"x16C |
| | 70.151.633 | DIN,2 | 150,0 | 90,0 | 11,0 | 90,0 | 56 | 402 | 3,4 | 130,0 | 136 | 40 | 20 | 150 DINx8x12,2 | SAE 1 3/4"x16C |
| | 70.151.643 | DIN,2 | 150,0 | 90,0 | 11,0 | 90,0 | 56 | 402 | 3,4 | 130,0 | 136 | 40 | 20 | 150 DINx8x10,2 | SAE 1 3/4"x16C |
| | 70.151.663 | DIN,2 | 165,0 | 95,0 | 11,0 | 90,0 | 56 | 402 | 3,4 | 140,0 | 136 | 40 | 20 | 165 DINx8x16,2 | SAE 1 3/4"x16C |
| | 70.151.673 | DIN,2 | 120,0 | 75,0 | 8,0 | 75,0 | 56 | 372 | 3,0 | 101,5 | 136 | 40 | 20 | 120 DINx8x8,2 | SAE 1 3/4"x16C |
| | 70.151.803 | SAE,1 | 146,0 | 95,2 | 9,0 | 63,5 | 56 | 349 | 1,8 | 120,6 | 136 | 40 | 20 | 146 SAEx4x12,9 | SAE 1 3/4"x16C |
| | 70.151.813 | SAE,1 | 146,0 | 95,2 | 9,0 | 63,5 | 56 | 349 | 1,8 | 120,6 | 136 | 40 | 20 | 146 SAEx4x14,3 | SAE 1 3/4"x16C |
| | 70.151.703 | XS,3 | 120,0 | - | 15 | 70,0 | 56 | 362 | - | 100,0 | 136 | 40 | 20 | 120 XSx4x11,1 | SAE 1 3/4"x16C |
| | 70.151.609 | DIN,2 | 120,0 | 75,0 | 8,0 | 75,0 | 60 | 389 | 3,0 | 101,5 | 136 | 40 | 20 | 120 DINx8x10,2 | SAE 1 3/4"x16C |
| | 70.151.639 | DIN,2 | 150,0 | 90,0 | 11,0 | 90,0 | 60 | 419 | 3,4 | 130,0 | 136 | 40 | 20 | 150 DINx8x12,2 | SAE 1 3/4"x16C |
| | 70.151.649 | DIN,2 | 150,0 | 90,0 | 11,0 | 90,0 | 60 | 419 | 3,4 | 130,0 | 136 | 40 | 20 | 150 DINx8x10,2 | SAE 1 3/4"x16C |
| | 70.151.669 | DIN,2 | 165,0 | 95,0 | 11,0 | 90,0 | 60 | 419 | 3,4 | 140,0 | 136 | 40 | 20 | 165 DINx8x16,2 | SAE 1 3/4"x16C |
| | 70.151.679 | DIN,2 | 120,0 | 75,0 | 8,0 | 75,0 | 60 | 389 | 3,0 | 101,5 | 136 | 40 | 20 | 120 DINx8x8,2 | SAE 1 3/4"x16C |
| | 70.151.809 | SAE,1 | 146,0 | 95,2 | 9,0 | 63,5 | 60 | 366 | 1,8 | 120,6 | 136 | 40 | 20 | 146 SAEx4x12,9 | SAE 1 3/4"x16C |
| | 70.151.819 | SAE,1 | 146,0 | 95,2 | 9,0 | 63,5 | 60 | 366 | 1,8 | 120,6 | 136 | 40 | 20 | 146 SAEx4x14,3 | SAE 1 3/4"x16C |
| | 70.151.709 | XS,3 | 120,0 | - | 15 | 70,0 | 60 | 379 | - | 100,0 | 136 | 40 | 20 | 120 XSx4x11,1 | SAE 1 3/4"x16C |
| | 70.151.605 | DIN,2 | 120,0 | 75,0 | 8,0 | 75,0 | 75 | 409 | 3,0 | 101,5 | 136 | 70 | 20 | 120 DINx8x10,2 | SAE 1 3/4"x16C |
| | 70.151.635 | DIN,2 | 150,0 | 90,0 | 11,0 | 90,0 | 75 | 439 | 3,4 | 130,0 | 136 | 70 | 20 | 150 DINx8x12,2 | SAE 1 3/4"x16C |
| | 70.151.645 | DIN,2 | 150,0 | 90,0 | 11,0 | 90,0 | 75 | 439 | 3,4 | 130,0 | 136 | 70 | 20 | 150 DINx8x10,2 | SAE 1 3/4"x16C |
| | 70.151.665 | DIN,2 | 165,0 | 95,0 | 11,0 | 90,0 | 75 | 439 | 3,4 | 140,0 | 136 | 70 | 20 | 165 DINx8x16,2 | SAE 1 3/4"x16C |
| | 70.151.675 | DIN,2 | 120,0 | 75,0 | 8,0 | 75,0 | 75 | 409 | 3,0 | 101,5 | 136 | 70 | 20 | 120 DINx8x8,2 | SAE 1 3/4"x16C |
| | 70.151.805 | SAE,1 | 146,0 | 95,2 | 9,0 | 63,5 | 75 | 386 | 1,8 | 120,6 | 136 | 70 | 20 | 146 SAEx4x12,9 | SAE 1 3/4"x16C |
| | 70.151.815 | SAE,1 | 146,0 | 95,2 | 9,0 | 63,5 | 75 | 386 | 1,8 | 120,6 | 136 | 70 | 20 | 146 SAEx4x14,3 | SAE 1 3/4"x16C |
| | 70.151.705 | XS,3 | 120,0 | - | 15 | 70,0 | 75 | 399 | - | 100,0 | 136 | 70 | 20 | 120 XSx4x11,1 | SAE 1 3/4"x16C |
| | 70.151.606 | DIN,2 | 120,0 | 75,0 | 8,0 | 75,0 | 60 | 415 | 3,0 | 101,5 | 136 | 40 | 20 | 120 DINx8x10,2 | SAE 1 3/4"x16C |
| | 70.151.636 | DIN,2 | 150,0 | 90,0 | 11,0 | 90,0 | 60 | 445 | 3,4 | 130,0 | 136 | 40 | 20 | 150 DINx8x12,2 | SAE 1 3/4"x16C |
| | 70.151.646 | DIN,2 | 150,0 | 90,0 | 11,0 | 90,0 | 60 | 445 | 3,4 | 130,0 | 136 | 40 | 20 | 150 DINx8x10,2 | SAE 1 3/4"x16C |
| | 70.151.666 | DIN,2 | 165,0 | 95,0 | 11,0 | 90,0 | 60 | 445 | 3,4 | 140,0 | 136 | 40 | 20 | 165 DINx8x16,2 | SAE 1 3/4"x16C |
| | 70.151.676 | DIN,2 | 120,0 | 75,0 | 8,0 | 75,0 | 60 | 415 | 3,0 | 101,5 | 136 | 40 | 20 | 120 DINx8x8,2 | SAE 1 3/4"x16C |
| | 70.151.806 | SAE,1 | 146,0 | 95,2 | 9,0 | 63,5 | 60 | 392 | 1,8 | 120,6 | 136 | 40 | 20 | 146 SAEx4x12,9 | SAE 1 3/4"x16C |
| | 70.151.816 | SAE,1 | 146,0 | 95,2 | 9,0 | 63,5 | 60 | 392 | 1,8 | 120,6 | 136 | 40 | 20 | 146 SAEx4x14,3 | SAE 1 3/4"x16C |
| | 70.151.706 | XS,3 | 120,0 | - | 15 | 70,0 | 60 | 405 | - | 100,0 | 136 | 40 | 20 | 120 XSx4x11,1 | SAE 1 3/4"x16C |
| | 70.151.608 | DIN,2 | 120,0 | 75,0 | 8,0 | 75,0 | 75 | 430 | 3,0 | 101,5 | 136 | 70 | 20 | 120 DINx8x10,2 | SAE 1 3/4"x16C |
| | 70.151.638 | DIN,2 | 150,0 | 90,0 | 11,0 | 90,0 | 75 | 460 | 3,4 | 130,0 | 136 | 70 | 20 | 150 DINx8x12,2 | SAE 1 3/4"x16C |
| | 70.151.648 | DIN,2 | 150,0 | 90,0 | 11,0 | 90,0 | 75 | 460 | 3,4 | 130,0 | 136 | 70 | 20 | 150 DINx8x10,2 | SAE 1 3/4"x16C |
| | 70.151.668 | DIN,2 | 165,0 | 95,0 | 11,0 | 90,0 | 75 | 460 | 3,4 | 140,0 | 136 | 70 | 20 | 165 DINx8x16,2 | SAE 1 3/4"x16C |
| | 70.151.678 | DIN,2 | 120,0 | 75,0 | 8,0 | 75,0 | 75 | 430 | 3,0 | 101,5 | 136 | 70 | 20 | 120 DINx8x8,2 | SAE 1 3/4"x16C |
| | 70.151.808 | SAE,1 | 146,0 | 95,2 | 9,0 | 63,5 | 75 | 407 | 1,8 | 120,6 | 136 | 70 | 20 | 146 SAEx4x12,9 | SAE 1 3/4"x16C |
| | 70.151.818 | SAE,1 | 146,0 | 95,2 | 9,0 | 63,5 | 75 | 407 | 1,8 | 120,6 | 136 | 70 | 20 | 146 SAEx4x14,3 | SAE 1 3/4"x16C |
| | 70.151.708 | XS,3 | 120,0 | - | 15 | 70,0 | 75 | 420 | - | 100,0 | 136 | 70 | 20 | 120 XSx4x11,1 | SAE 1 3/4"x16C |

E= NUMBER OF HOLES / LOCHANZAHL / DELİK SAYISI
ß= JOINT ANGLE / BEUGEWINKEL / MAFSAL AÇISI
O= SPIGIT DEPTH / ZENTRIERBOHRUNGTIEFE / SPİGOT DERİNLİĞİ

# UZMANKARDAN

## PROPELLER SHAFTS WITH SLIDING MOVEMENT, SHORT DESIGN / G.WELLEN MIT LAENGENAUSGLEICH, KURZAUSFÜHRUNG / KAYICILI ŞAFTLAR, KISA TİP



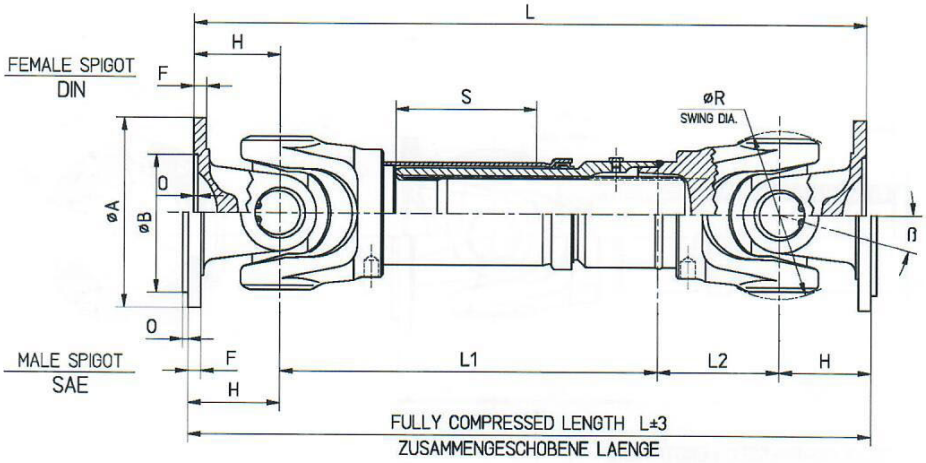


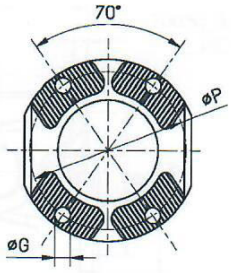


CROSS TOOTH SERRATED
XS
Fig. 1

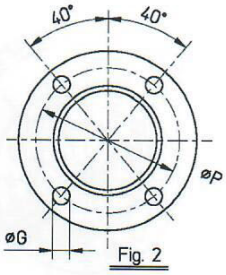


Fig. 2

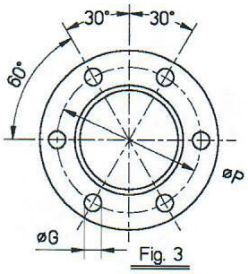


Fig. 3

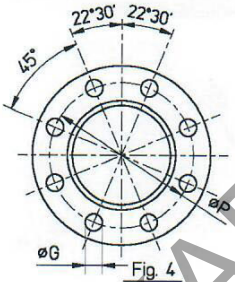


Fig. 4

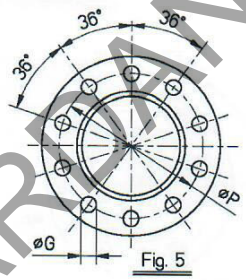


Fig. 5

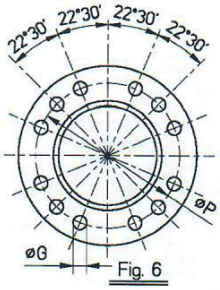


Fig. 6

**KAT-70/Y6** **14/01/2009**

| SERIE BAUGR SERI | CATALOGUE NO KATALOG NR KATALOG NO | FIG | A | B | F | H | L2 | L | O | P | R | S | ß° | CONNECTION ANSCHLUSS A,TYPExExG | SPLINE |
|---|---|---|---|---|---|---|---|---|---|---|---|---|---|---|---|
| 424 | 70.424.100 | DIN,3 | 150 | 90,0 | 10,0 | 60,0 | 65 | 475 | 3,0 | 130,0 | 118 | 80 | 25° | 150 DINx6x10,2 | 45x2,5x16 DIN5480** |
| 381 | 70.381.700 | XS,1 | 120 | - | 16,5 | 70,0 | 70 | 410 | - | 100,0 | 126 | 60 | 22° | 120 XSx4x11,1 | 55x2,5x20 DIN5480** |
| | 70.381.701 | XS,1 | 120 | - | 16,0 | 65,0 | 70 | 400 | - | 100,0 | 126 | 60 | 17° | 120 XSx4x11,1 | 55x2,5x20 DIN5480** |
| | 70.381.702 | XS,1 | 120 | - | 16,5 | 52,5 | 70 | 375 | - | 100,0 | 126 | 60 | 10° | 120 XSx4x11,1 | 55x2,5x20 DIN5480** |
| | 70.381.710 | XS,1 | 120 | - | 16,5 | 70,0 | 80 | 522 | - | 100,0 | 126 | 110 | 22° | 120 XSx4x11,1 | 55x2,5x20 DIN5480** |
| | 70.381.711 | XS,1 | 120 | - | 16,0 | 65,0 | 80 | 512 | - | 100,0 | 126 | 110 | 17° | 120 XSx4x11,1 | 55x2,5x20 DIN5480** |
| | 70.381.712 | XS,1 | 120 | - | 16,5 | 52,5 | 80 | 487 | - | 100,0 | 126 | 110 | 10° | 120 XSx4x11,1 | 55x2,5x20 DIN5480** |
| 385 | 70.385.600 | DIN,4 | 150 | 90,0 | 12,0 | 75,0 | 84 | 559 | 3,5 | 130 | 148 | 100 | 24° | 150 DINx8x12,2 | 65x2,5x24 DIN5480** |
| | 70.385.601 | DIN,4 | 165 | 95,0 | 12,0 | 82,5 | 84 | 574 | 3,0 | 140 | 148 | 100 | 24° | 165 DINx8x16,2 | 65x2,5x24 DIN5480** |
| | 70.385.602 | DIN,4 | 180 | 110,0 | 12,0 | 82,5 | 84 | 574 | 3,5 | 155,5 | 148 | 100 | 24° | 180 DINx8x14,2 | 65x2,5x24 DIN5480** |
| | 70.385.603 | DIN,5 | 180 | 110,0 | 12,0 | 82,5 | 84 | 574 | 3,5 | 155,5 | 148 | 100 | 24° | 180 DINx10x16,2 | 65x2,5x24 DIN5480** |
| | 70.385.604 | DIN,4 | 180 | 110,0 | 12,0 | 82,5 | 84 | 574 | 3,5 | 155,5 | 148 | 100 | 24° | 180 DINx8x12,2 | 65x2,5x24 DIN5480** |
| | 70.385.800 | SAE,4 | 175 | 168,2 | 10,5 | 82,5 | 84 | 574 | 2,5 | 155,6 | 148 | 100 | 24° | 175 SAEx8x9,7 | 65x2,5x24 DIN5480** |
| | 70.385.700 | XS,1 | 150 | - | 17,5 | 75,0 | 84 | 559 | - | 130,0 | 148 | 100 | 24° | 150 XSx4x13,1 | 65x2,5x24 DIN5480** |
| | 70.385.701 | XS,1 | 180 | - | 19,0 | 90,0 | 84 | 589 | - | 150,0 | 148 | 100 | 24° | 180 XSx4x15,1 | 65x2,5x24 DIN5480** |
| | 70.385.610 | DIN,4 | 150 | 90,0 | 12,0 | 75,0 | 84 | 531 | 3,5 | 130 | 148 | 80 | 24° | 150 DINx8x12,2 | 65x2,5x24 DIN5480** |
| | 70.385.611 | DIN,4 | 165 | 95,0 | 12,0 | 82,5 | 84 | 546 | 3,0 | 140 | 148 | 80 | 24° | 165 DINx8x16,2 | 65x2,5x24 DIN5480** |
| | 70.385.612 | DIN,4 | 180 | 110,0 | 12,0 | 82,5 | 84 | 546 | 3,5 | 155,5 | 148 | 80 | 24° | 180 DINx8x14,2 | 65x2,5x24 DIN5480** |
| | 70.385.613 | DIN,5 | 180 | 110,0 | 12,0 | 82,5 | 84 | 546 | 3,5 | 155,5 | 148 | 80 | 24° | 180 DINx10x16,2 | 65x2,5x24 DIN5480** |
| | 70.385.614 | DIN,4 | 180 | 110,0 | 12,0 | 82,5 | 84 | 546 | 3,5 | 155,5 | 148 | 80 | 24° | 180 DINx8x12,2 | 65x2,5x24 DIN5480** |
| | 70.385.810 | SAE,4 | 175 | 168,2 | 10,5 | 82,5 | 84 | 546 | 2,5 | 155,6 | 148 | 80 | 24° | 175 SAEx8x9,7 | 65x2,5x24 DIN5480** |
| | 70.385.710 | XS,1 | 150 | - | 17,5 | 75,0 | 84 | 531 | - | 130,0 | 148 | 80 | 24° | 150 XSx4x13,1 | 65x2,5x24 DIN5480** |
| | 70.385.711 | XS,1 | 180 | - | 19,0 | 90,0 | 84 | 561 | - | 150,0 | 148 | 80 | 24° | 180 XSx4x15,1 | 65x2,5x24 DIN5480** |
| | 70.385.620 | DIN,4 | 150 | 90,0 | 12,0 | 75,0 | 101 | 590 | 3,5 | 130 | 148 | 100 | 24° | 150 DINx8x12,2 | 65x2,5x24 DIN5480** |
| | 70.385.621 | DIN,4 | 165 | 95,0 | 12,0 | 82,5 | 101 | 605 | 3,0 | 140 | 148 | 100 | 24° | 165 DINx8x16,2 | 65x2,5x24 DIN5480** |
| | 70.385.622 | DIN,4 | 180 | 110,0 | 12,0 | 82,5 | 101 | 605 | 3,5 | 155,5 | 148 | 100 | 24° | 180 DINx8x14,2 | 65x2,5x24 DIN5480** |
| | 70.385.623 | DIN,5 | 180 | 110,0 | 12,0 | 82,5 | 101 | 605 | 3,5 | 155,5 | 148 | 100 | 24° | 180 DINx10x16,2 | 65x2,5x24 DIN5480** |
| | 70.385.624 | DIN,4 | 180 | 110,0 | 12,0 | 82,5 | 101 | 605 | 3,5 | 155,5 | 148 | 100 | 24° | 180 DINx8x12,2 | 65x2,5x24 DIN5480** |
| | 70.385.820 | SAE,4 | 175 | 168,2 | 10,5 | 82,5 | 101 | 605 | 2,5 | 155,6 | 148 | 100 | 24° | 175 SAEx8x9,7 | 65x2,5x24 DIN5480** |
| | 70.385.720 | XS,1 | 150 | - | 17,5 | 75,0 | 101 | 590 | - | 130,0 | 148 | 100 | 24° | 150 XSx4x13,1 | 65x2,5x24 DIN5480** |
| | 70.385.721 | XS,1 | 180 | - | 19,0 | 90,0 | 101 | 620 | - | 150,0 | 148 | 100 | 24° | 180 XSx4x15,1 | 65x2,5x24 DIN5480** |

E= NUMBER OF HOLES / LOCHANZAHL / DELİK SAYISI
ß= JOINT ANGLE / BEUGEWINKEL / MAFSAL AÇISI
O= SPIGIT DEPTH / ZENTRIERBOHRUNGTIEFE / SPİGOT DERİNLİĞİ

# UZMANKARDAN

## 74 PROPELLER SHAFTS WITH SLIDING MOVEMENT, SHORT DESIGN / G.WELLEN MIT LAENGENAUSGLEICH, KURZAUSFÜHRUNG / KAYICILI ŞAFTLAR, KISA TİP

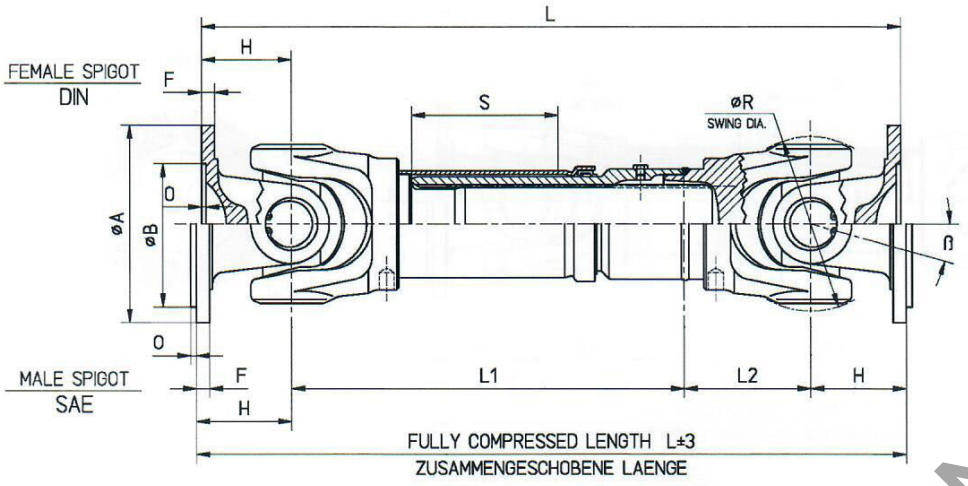


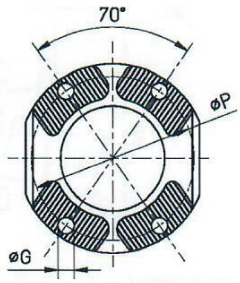


CROSS TOOTH SERRATED
XS
Fig. 1

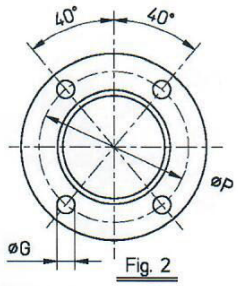


Fig. 2

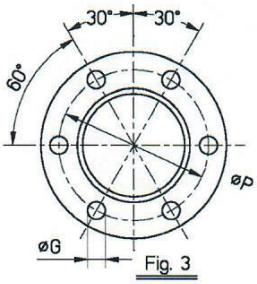


Fig. 3

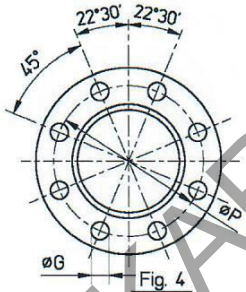


Fig. 4

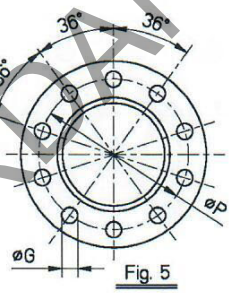


Fig. 5

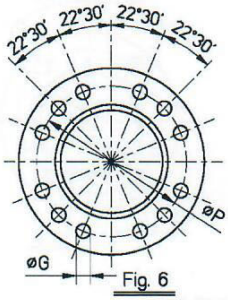


Fig. 6



**KAT-70/Y7** **14/01/2009**

| SERIE BAUGR SERI | CATALOGUE NO KATALOG NR KATALOG NO | FIG | A | B | F | H | L2 | L | O | P | R | S | ß° | CONNECTION ANSCHLUSS A,TYPExExG | SPLINE |
|---|---|---|---|---|---|---|---|---|---|---|---|---|---|---|---|
| | 70.389.700 | XS,1 | 150 | - | 17,5 | 85,0 | 116 | 621 | - | 130,0 | 159 | 80 | 27° | 150 XSx4x13,1 | 72x2,5x27 DIN5480** |
| | 70.389.701 | XS,1 | 150 | - | 18,0 | 100,0 | 116 | 651 | - | 130,0 | 159 | 80 | 44° | 150 XSx4x13,1 | 72x2,5x27 DIN5480** |
| | 70.389.702 | XS,1 | 150 | - | 17,5 | 82,0 | 116 | 615 | - | 130,0 | 159 | 80 | 25° | 150 XSx4x13,1 | 72x2,5x27 DIN5480** |
| | 70.389.703 | XS,1 | 165 | - | 17,5 | 97,0 | 116 | 645 | - | 140,0 | 159 | 80 | 36° | 165 XSx4x13,1 | 72x2,5x27 DIN5480** |
| | 70.389.704 | XS,1 | 180 | - | 18,0 | 92,5 | 116 | 636 | - | 150,0 | 159 | 80 | 30° | 180 XSx4x15,1 | 72x2,5x27 DIN5480** |
| | 70.389.705 | XS,1 | 180 | - | 19,5 | 84,5 | 116 | 620 | - | 150,0 | 159 | 80 | 25° | 180 XSx4x15,1 | 72x2,5x27 DIN5480** |
| | 70.389.710 | XS,1 | 150 | - | 17,5 | 85,0 | 116 | 646 | - | 130,0 | 159 | 140 | 25° | 150 XSx4x13,1 | 72x2,5x27 DIN5480** |
| | 70.389.711 | XS,1 | 150 | - | 18,0 | 100,0 | 116 | 676 | - | 130,0 | 159 | 140 | 44° | 150 XSx4x13,1 | 72x2,5x27 DIN5480** |
| | 70.389.712 | XS,1 | 150 | - | 16,5 | 82,0 | 116 | 640 | - | 130,0 | 159 | 140 | 30° | 150 XSx4x13,1 | 72x2,5x27 DIN5480** |
| | 70.389.713 | XS,1 | 165 | - | 17,5 | 97,0 | 116 | 670 | - | 140,0 | 159 | 140 | 36° | 165 XSx4x13,1 | 72x2,5x27 DIN5480** |
| | 70.389.714 | XS,1 | 180 | - | 18,0 | 92,5 | 116 | 661 | - | 150,0 | 159 | 140 | 30° | 180 XSx4x15,1 | 72x2,5x27 DIN5480** |
| | 70.389.715 | XS,1 | 180 | - | 18,5 | 84,5 | 116 | 645 | - | 150,0 | 159 | 140 | 30° | 180 XSx4x15,1 | 72x2,5x27 DIN5480** |
| | 70.389.720 | XS,1 | 150 | - | 17,5 | 85,0 | 116 | 661 | - | 130,0 | 159 | 150 | 25° | 150 XSx4x13,1 | 72x2,5x27 DIN5480** |
| | 70.389.721 | XS,1 | 150 | - | 18,0 | 100,0 | 116 | 691 | - | 130,0 | 159 | 150 | 44° | 150 XSx4x13,1 | 72x2,5x27 DIN5480** |
| | 70.389.722 | XS,1 | 150 | - | 16,5 | 82,0 | 116 | 655 | - | 130,0 | 159 | 150 | 30° | 150 XSx4x13,1 | 72x2,5x27 DIN5480** |
| | 70.389.723 | XS,1 | 165 | - | 17,5 | 97,0 | 116 | 685 | - | 140,0 | 159 | 150 | 36° | 165 XSx4x13,1 | 72x2,5x27 DIN5480** |
| | 70.389.724 | XS,1 | 180 | - | 18,0 | 92,5 | 116 | 676 | - | 150,0 | 159 | 150 | 30° | 180 XSx4x15,1 | 72x2,5x27 DIN5480** |
| | 70.389.725 | XS,1 | 180 | - | 18,5 | 84,5 | 116 | 660 | - | 150,0 | 159 | 150 | 30° | 180 XSx4x15,1 | 72x2,5x27 DIN5480** |
| | 70.389.730 | XS,1 | 150 | - | 17,5 | 85,0 | 116 | 595 | - | 130,0 | 159 | 85 | 25° | 150 XSx4x13,1 | 72x2,5x27 DIN5480** |
| | 70.389.731 | XS,1 | 150 | - | 18,0 | 100,0 | 116 | 625 | - | 130,0 | 159 | 85 | 44° | 150 XSx4x13,1 | 72x2,5x27 DIN5480** |
| | 70.389.732 | XS,1 | 150 | - | 16,5 | 82,0 | 116 | 589 | - | 130,0 | 159 | 85 | 30° | 150 XSx4x13,1 | 72x2,5x27 DIN5480** |
| | 70.389.733 | XS,1 | 165 | - | 17,5 | 97,0 | 116 | 619 | - | 140,0 | 159 | 85 | 36° | 165 XSx4x13,1 | 72x2,5x27 DIN5480** |
| | 70.389.734 | XS,1 | 180 | - | 18,0 | 92,5 | 116 | 610 | - | 150,0 | 159 | 85 | 30° | 180 XSx4x15,1 | 72x2,5x27 DIN5480** |
| | 70.389.735 | XS,1 | 180 | - | 18,5 | 84,5 | 116 | 594 | - | 150,0 | 159 | 85 | 30° | 180 XSx4x15,1 | 72x2,5x27 DIN5480** |
| 446 | 70.446.700 | XS,1 | 180 | - | 17,5 | 87,0 | 90 | 580 | - | 150,0 | 170 | 100 | 25° | 180 XSx4x15,1 | 75x2,5x28 DIN5480 |
| | 70.446.701 | XS,1 | 150 | - | 17,5 | 87,0 | 90 | 580 | - | 130,0 | 170 | 100 | 25° | 150 XSx4x13,1 | 75x2,5x28 DIN5481 |
| | 70.446.710 | XS,1 | 180 | - | 17,5 | 87,0 | 85 | 510 | - | 150,0 | 170 | 70 | 25° | 180 XSx4x15,1 | 75x2,5x28 DIN5480 |
| | 70.446.711 | XS,1 | 150 | - | 17,5 | 87,0 | 85 | 510 | - | 130,0 | 170 | 70 | 25° | 150 XSx4x13,1 | 75x2,5x28 DIN5481 |

E= NUMBER OF HOLES / LOCHANZAHL / DELİK SAYISI
ß= JOINT ANGLE / BEUGEWINKEL / MAFSAL AÇISI
O= SPIGIT DEPTH / ZENTRIERBOHRUNGTIEFE / SPİGOT DERİNLİĞİ

## MIDSHIP EXTENSION SHAFTS WITH CENTER BEARING / GELENKZWISCHENWELLEN MIT ZWISCHENWELLENLAGER / ARAYATAKLI ÖN ŞAFTLAR



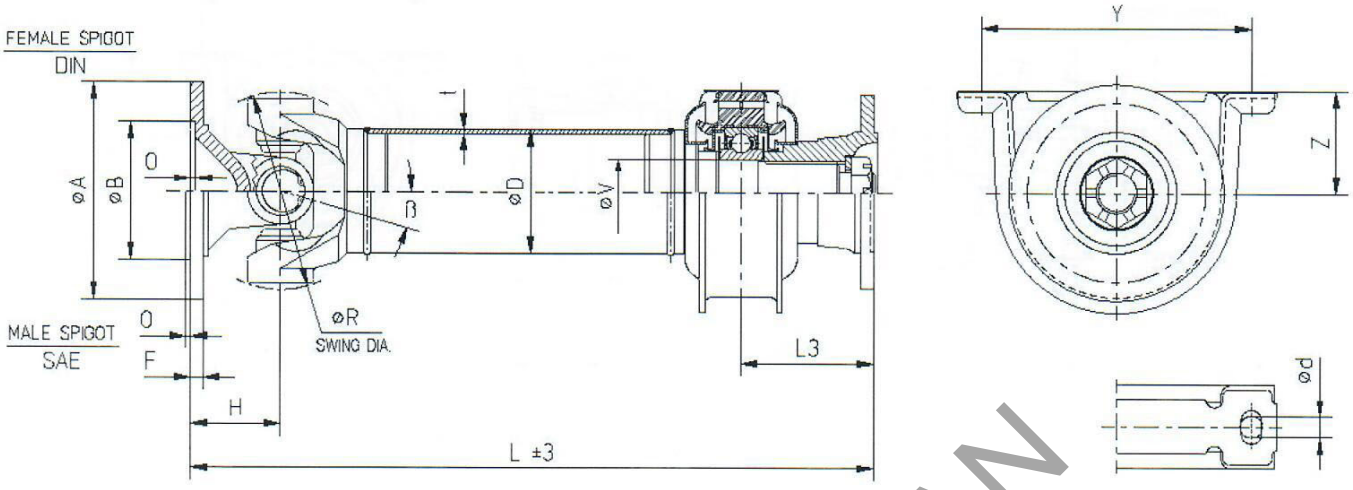


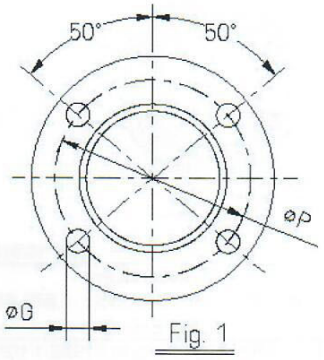


Fig. 1

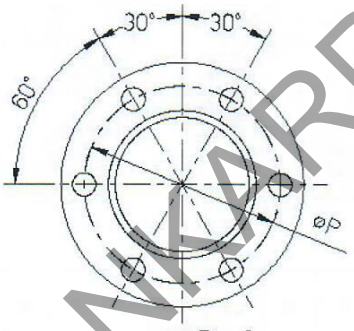


Fig. 2

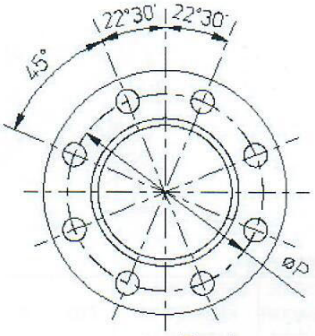


Fig. 3



**KAT-71/1** **15/01/2009**

| SERIE BAUGR SERİ | CATALOGUE NO KATALOG NR KATALOG NO | FIG | A | B | Dxt | F | H | L3 | L MIN | O | P | R | V | Y | Z | d | ß° | CONNECTION ANSCHLUSS A,TYPExExG | SPLINE |
|---|---|---|---|---|---|---|---|---|---|---|---|---|---|---|---|---|---|---|---|
| 1310 | 71.131.100 | SAE,1 | 97 | 60,3 | 50,8x2,4 | 6,7 | 35 | 73,2 | 232 | 1,4 | 79,4 | 97 | 35 | 168,4 | 57,9 | 12,7 | 20° | 97 SAEx4x9,7 | SAE 1 3/8"x10C |
| | 71.131.101 | SAE,1 | 97 | 60,3 | | 6,7 | 35 | 73,2 | 232 | 1,4 | 79,4 | | | | | | 20° | 97 SAEx4x10,2 | SAE 1 3/8"x10C |
| | 71.131.020 | DIN,2 | 100 | 57,0 | | 6,7 | 53 | 73 | 250 | 2,5 | 84,0 | | | | | | 30° | 100 DINx6x8,1 | SAE 1 3/8"x10C |
| | 71.131.110 | SAE,1 | 97 | 60,3 | 63,5x1,6 | 6,7 | 35 | 73,2 | 232 | 1,4 | 79,4 | 97 | 35 | 168,4 | 57,9 | 12,7 | 20° | 97 SAEx4x9,7 | SAE 1 3/8"x10C |
| | 71.131.111 | SAE,1 | 97 | 60,3 | | 6,7 | 35 | 73,2 | 232 | 1,4 | 79,4 | | | | | | 20° | 97 SAEx4x10,2 | SAE 1 3/8"x10C |
| | 71.131.040 | DIN,2 | 100 | 57,0 | | 6,7 | 53 | 73 | 250 | 2,5 | 84,0 | | | | | | 30° | 100 DINx6x8,1 | SAE 1 3/8"x10C |
| | 71.131.120 | SAE,1 | 97 | 60,3 | 69,8x1,6 | 6,7 | 35 | 73,2 | 240 | 1,4 | 79,4 | 97 | 35 | 168,4 | 57,9 | 12,7 | 20° | 97 SAEx4x9,7 | SAE 1 3/8"x10C |
| | 71.131.121 | SAE,1 | 97 | 60,3 | | 6,7 | 35 | 73,2 | 240 | 1,4 | 79,4 | | | | | | 20° | 97 SAEx4x10,2 | SAE 1 3/8"x10C |
| | 71.131.050 | DIN,2 | 100 | 57,0 | | 6,7 | 53 | 73 | 258 | 2,5 | 84,0 | | | | | | 30° | 100 DINx6x8,1 | SAE 1 3/8"x10C |
| | 71.131.130 | SAE,1 | 97 | 60,3 | 76,2x1,6 | 6,7 | 35 | 73,2 | 224 | 1,4 | 79,4 | 97 | 35 | 168,4 | 57,9 | 12,7 | 20° | 97 SAEx4x9,7 | SAE 1 3/8"x10C |
| | 71.131.131 | SAE,1 | 97 | 60,3 | | 6,7 | 35 | 73,2 | 224 | 1,4 | 79,4 | | | | | | 20° | 97 SAEx4x10,2 | SAE 1 3/8"x10C |
| | 71.131.060 | DIN,2 | 100 | 57,0 | | 6,7 | 53 | 73 | 242 | 2,5 | 84,0 | | | | | | 30° | 100 DINx6x8,1 | SAE 1 3/8"x10C |
| | 71.131.140 | SAE,1 | 97 | 60,3 | 76,2x2,1 | 6,7 | 35 | 73,2 | 224 | 1,4 | 79,4 | 97 | 35 | 168,4 | 57,9 | 12,7 | 20° | 97 SAEx4x9,7 | SAE 1 3/8"x10C |
| | 71.131.141 | SAE,1 | 97 | 60,3 | | 6,7 | 35 | 73,2 | 224 | 1,4 | 79,4 | | | | | | 20° | 97 SAEx4x10,2 | SAE 1 3/8"x10C |
| | 71.131.050 | DIN,2 | 100 | 57,0 | | 6,7 | 53 | 73 | 242 | 2,5 | 84,0 | | | | | | 30° | 100 DINx6x8,1 | SAE 1 3/8"x10C |
| | 71.131.150 | SAE,1 | 97 | 60,3 | 76,2x2,4 | 6,7 | 35 | 73,2 | 247 | 1,4 | 79,4 | 97 | 35 | 168,4 | 57,9 | 12,7 | 20° | 97 SAEx4x9,7 | SAE 1 3/8"x10C |
| | 71.131.151 | SAE,1 | 97 | 60,3 | | 6,7 | 35 | 73,2 | 247 | 1,4 | 79,4 | | | | | | 20° | 97 SAEx4x10,2 | SAE 1 3/8"x10C |
| | 71.131.060 | DIN,2 | 100 | 57,0 | | 6,7 | 53 | 73 | 265 | 2,5 | 84,0 | | | | | | 30° | 100 DINx6x8,1 | SAE 1 3/8"x10C |
| 1410 | 71.141.010 | DIN,3 | 120 | 75,0 | 76,2x2,4 | 8,0 | 56 | 82,6 | 266 | 3,0 | 101,5 | 122 | 40 | 168,4 | 62,7 | 12,7 | 20° | 120 DINx8x10,2 | SAE 1 1/2"x10C |
| | 71.141.100 | SAE,1 | 114 | 69,8 | | 7,5 | 43 | 82,6 | 253 | 1,4 | 95,3 | 122 | | | | | 20° | 114 SAEx4x11,3 | SAE 1 1/2"x10C |
| | 71.141.110 | SAE,1 | 146 | 95,2 | | 11,5 | 50,8 | 96,9 | 275 | 1,5 | 120,6 | 122 | | | | | 20° | 146 SAEx4x13,0 | SAE 1 1/2"x10C |
| | 71.141.101 | SAE,1 | 146 | 95,2 | | 11,5 | 50,8 | 82,6 | 262 | 1,5 | 120,6 | 122 | | | | | 20° | 146 SAEx4x14,2 | SAE 1 1/2"x10C |

E= NUMBER OF HOLES / LOCHANZAHL / DELİK SAYISI
ß= JOINT ANGLE / BEUGEWINKEL / MAFSAL AÇISI
L = MINIMUM FACE TO FACE LENGTH AVAILABLE / KLEINSTE ZUSAMMENGESCHOBENE LAENGE / MÜMKÜN OLABİLİR MİN. KAPALI ŞAFT BOYU

# UZMANKARDAN

## 76 MIDSHIP EXTENSION SHAFTS WITH CENTER BEARING / GELENKZWISCHENWELLEN MIT ZWISCHENWELLENLAGER / ARAYATAKLI ÖN ŞAFTLAR

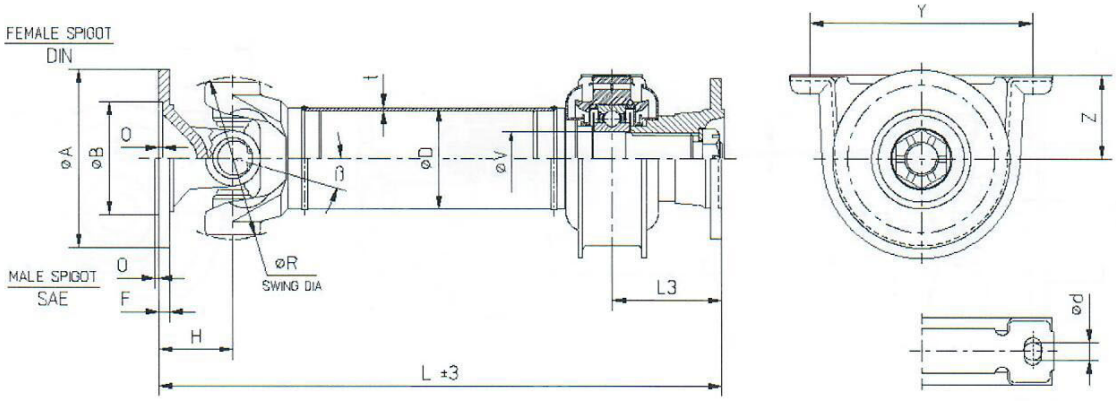


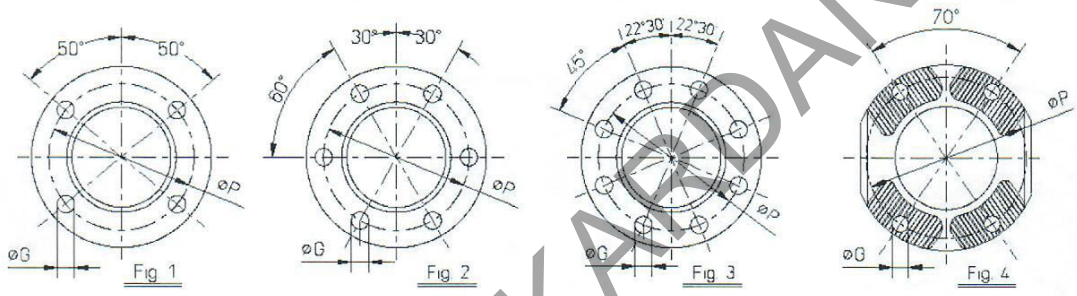


KAT-71/2 15/01/2009

| SERIE BAUGR SERİ | CATALOGUE NO KATALOG NR KATALOG NO | FIG | A | B | Dxt | F | H | L3 | L MIN | O | P | R | V | Y | Z | d | ß° | CONNECTION ANSCHLUSS A,TYPExExG | SPLINE |
|---|---|---|---|---|---|---|---|---|---|---|---|---|---|---|---|---|---|---|---|
| 1410 | 71.141.030 | DIN,3 | 120 | 75,0 | | 8,0 | 56 | 82,6 | 278 | 3,0 | 101,5 | 122 | | | | | 20° | 120 DINx8x10,2 | SAE 1 1/2"x10C |
| | 71.141.120 | SAE,1 | 114 | 69,8 | 88,9x2,4 | 7,5 | 43 | 82,6 | 265 | 1,4 | 95,3 | 122 | 40 | 168,4 | 62,7 | 12,7 | 20° | 114 SAEx4x11,3 | SAE 1 1/2"x10C |
| | 71.141.121 | SAE,1 | 146 | 95,2 | | 11,5 | 50,8 | 96,9 | 287 | 1,5 | 120,6 | 122 | | | | | 20° | 146 SAEx4x13,0 | SAE 1 1/2"x10C |
| | 71.141.122 | SAE,1 | 146 | 95,2 | | 11,5 | 50,8 | 82,6 | 278 | 1,5 | 120,6 | 122 | | | | | 20° | 146 SAEx4x14,2 | SAE 1 1/2"x10C |
| 1510 | 71.151.010 | DIN,3 | 120,0 | 75,0 | | 8,0 | 75,0 | 82,6 | 312 | 3,0 | 101,5 | 136 | | | | | 20° | 120 DINx8x10,2 | SAE 1 1/2"x10C |
| | 71.151.050 | DIN,3 | 120,0 | 75,0 | 76,2x2,4 | 8,0 | 75,0 | 82,6 | 312 | 3,0 | 101,5 | 136 | 40 | 168,4 | 62,7 | 12,7 | 20° | 120 DINx8x8,2 | SAE 1 1/2"x10C |
| | 71.151.100 | SAE,1 | 146,0 | 95,2 | | 9,0 | 63,5 | 96,9 | 314 | 1,8 | 120,6 | 136 | | | | | 20° | 146 SAEx4x12,9 | SAE 1 1/2"x10C |
| | 71.151.110 | SAE,1 | 146,0 | 95,2 | | 9,0 | 63,5 | 82,6 | 281 | 1,8 | 120,6 | 136 | | | | | 20° | 146 SAEx4x14,3 | SAE 1 1/2"x10C |
| | 71.151.021 | DIN,3 | 120,0 | 75,0 | | 8,0 | 75,0 | 82,6 | 321 | 3,0 | 101,5 | 136 | | | | | 20° | 120 DINx8x10,2 | SAE 1 1/2"x10C |
| | 71.151.022 | DIN,3 | 120,0 | 75,0 | 88,9x2,4 | 8,0 | 75,0 | 82,6 | 321 | 3,0 | 101,5 | 136 | 40 | 168,4 | 62,7 | 12,7 | 20° | 120 DINx8x8,2 | SAE 1 1/2"x10C |
| | 71.151.111 | SAE,1 | 146,0 | 95,2 | | 9,0 | 63,5 | 96,9 | 324 | 1,8 | 120,6 | 136 | | | | | 20° | 146 SAEx4x12,9 | SAE 1 1/2"x10C |
| | 71.151.112 | SAE,1 | 146,0 | 95,2 | | 9,0 | 63,5 | 82,6 | 310 | 1,8 | 120,6 | 136 | | | | | 20° | 146 SAEx4x14,3 | SAE 1 1/2"x10C |
| | 71.151.031 | DIN,3 | 120,0 | 75,0 | | 8,0 | 75,0 | 78 | 326 | 3,0 | 101,5 | 136 | | | | | 20° | 120 DINx8x10,2 | SAE 1 3/4"x10C |
| | 71.151.120 | SAE,1 | 146,0 | 95,2 | 90x3,5 | 9,0 | 63,5 | 85,7 | 323 | 1,8 | 120,6 | 136 | 45 | 193,8 | 69,1 | 12,7 | 20° | 146 SAEx4x12,9 | SAE 1 3/4"x10C |
| | 71.151.121 | SAE,1 | 146,0 | 95,2 | | 9,0 | 63,5 | 79,5 | 317 | 1,8 | 120,6 | 136 | | | | | 20° | 146 SAEx4x14,3 | SAE 1 3/4"x10C |
| | 71.151.520 | XS,4 | 120,0 | - | | 15 | 70,0 | 82,6 | 326 | - | 100,0 | 136 | | | | | 25° | 120 XSx4x11,1 | SAE 1 3/4"x10C |
| | 71.151.041 | DIN,3 | 120,0 | 75,0 | | 8,0 | 75,0 | 78 | 307 | 3,0 | 101,5 | 136 | | | | | 20° | 120 DINx8x10,2 | SAE 1 3/4"x10C |
| | 71.151.130 | SAE,1 | 146,0 | 95,2 | 76,2x2,4 | 9,0 | 63,5 | 85,7 | 304 | 1,8 | 120,6 | 136 | 45 | 193,8 | 69,1 | 12,7 | 20° | 146 SAEx4x12,9 | SAE 1 3/4"x10C |
| | 71.151.131 | SAE,1 | 146,0 | 95,2 | | 9,0 | 63,5 | 79,5 | 298 | 1,8 | 120,6 | 136 | | | | | 20° | 146 SAEx4x14,3 | SAE 1 3/4"x10C |
| | 71.151.530 | XS,4 | 120,0 | - | | 15 | 70,0 | 82,6 | 307 | - | 100,0 | 136 | | | | | 25° | 120 XSx4x11,1 | SAE 1 3/4"x10C |
| | 71.151.051 | DIN,3 | 120,0 | 75,0 | | 8,0 | 75,0 | 78 | 316 | 3,0 | 101,5 | 136 | | | | | 20° | 120 DINx8x10,2 | SAE 1 3/4"x10C |
| | 71.151.140 | SAE,1 | 146,0 | 95,2 | 88,9x2,4 | 9,0 | 63,5 | 85,7 | 313 | 1,8 | 120,6 | 136 | 45 | 193,8 | 69,1 | 12,7 | 20° | 146 SAEx4x12,9 | SAE 1 3/4"x10C |
| | 71.151.141 | SAE,1 | 146,0 | 95,2 | | 9,0 | 63,5 | 79,5 | 307 | 1,8 | 120,6 | 136 | | | | | 20° | 146 SAEx4x14,3 | SAE 1 3/4"x10C |
| | 71.151.540 | XS,4 | 120,0 | - | | 15 | 70,0 | 82,6 | 316 | - | 100,0 | 136 | | | | | 25° | 120 XSx4x11,1 | SAE 1 3/4"x10C |
| 420 | 71.420.100 | SAE,1 | 114 | 69,8 | 76,2x1,6 | 8,0 | 40,0 | 73,4 | 241 | 1,4 | 95,3 | 97 | 35 | 168,4 | 57,9 | 12,7 | 20° | 114 SAEx4x12,4 | SAE 1 3/8"x10C |
| | 71.420.101 | SAE,1 | 100 | 60,3 | | 6,8 | 58,0 | 73,2 | 258 | 1,4 | 79,4 | 97 | | | | | 20° | 97 SAEx4x10,2 | SAE 1 3/8"x10C |
| | 71.420.010 | DIN,3 | 120 | 75,0 | | 8,0 | 54,0 | 82,6 | 268 | 3,0 | 101,5 | 98 | | | | | 20° | 120 DINx8x10,2 | SAE 1 1/2"x10C |
| | 71.420.100 | SAE,1 | 114 | 69,8 | 76,2x2,4 | 8,0 | 40,0 | 73,4 | 241 | 1,4 | 95,3 | 97 | 40 | 168,4 | 62,7 | 12,7 | 20° | 114 SAEx4x12,4 | SAE 1 3/8"x10C |
| | 71.420.111 | SAE,1 | 114 | 69,8 | | 8,0 | 40,0 | 82,6 | 250 | 1,4 | 95,3 | 98 | | | | | 20° | 114 SAEx4x11,3 | SAE 1 1/2"x10C |

E= NUMBER OF HOLES / LOCHANZAHL / DELİK SAYISI
ß= JOINT ANGLE / BEUGEWINKEL / MAFSAL AÇISI
L = MINIMUM FACE TO FACE LENGTH AVAILABLE / KLEINSTE ZUSAMMENGESCHOBENE LAENGE / MÜMKÜN OLABİLİR MİN. KAPALI ŞAFT BOYU

# UZMANKARDAN

## MIDSHIP EXTENSION SHAFTS WITH CENTER BEARING / GELENKZWISCHENWELLEN MIT ZWISCHENWELLENLAGER / ARAYATAKLI ÖN ŞAFTLAR



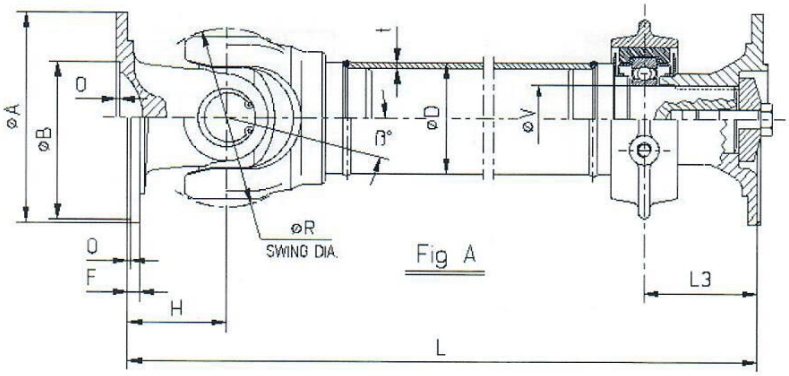


Fig A

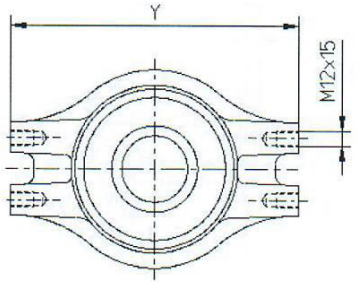


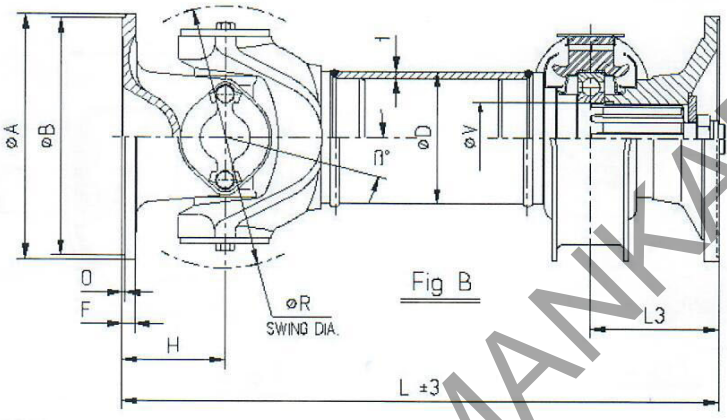


Fig B

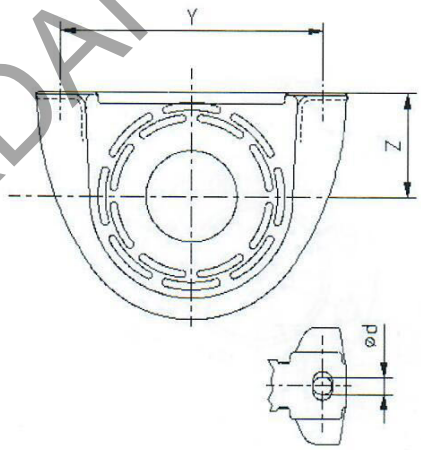


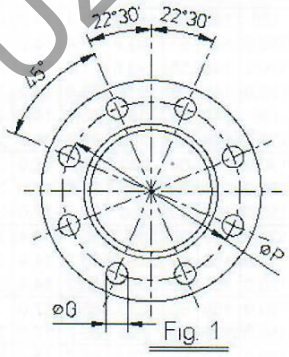


Fig. 1

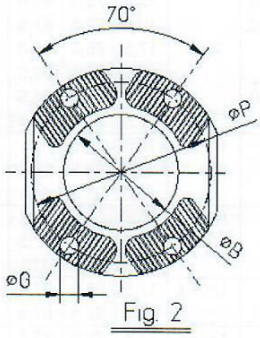


Fig. 2



**KAT-71/3** **19/01/2009**

| SERIE BAUGR SERI | CATALOGUE NO KATALOG NR KATALOG NO | FIG | A | B | Dxt | F | H | L3 | L | O | P | R | V | Y | Z | d | ß° | CONNECTION ANSCHLUSS A,TYPExExG | SPLINE |
|---|---|---|---|---|---|---|---|---|---|---|---|---|---|---|---|---|---|---|---|
| 385 | 71.385.010 | DIN,A1 | 150 | 90,0 | | 12,0 | 75,0 | 94,5 | 360 | 3,5 | 130 | 148 | | | | | 25° | 150 DINx8x12,2 | 55x2,5x20 DIN5480 |
| | 71.385.500 | XS,A2 | 150 | - | | 17,5 | 75,0 | 94,5 | 360 | - | 130,0 | 148 | 55 | 233 | 50 | M12 | 24° | 150 XSx4x13,1 | 55x2,5x20 DIN5480 |
| | 71.385.501 | XS,A2 | 180 | - | | 16,0 | 90,0 | 98,0 | 365 | - | 150,0 | 148 | | | | | 25° | 180 XSx4x15,1 | 55x2,5x20 DIN5480 |

E= NUMBER OF HOLES / LOCHANZAHL / DELİK SAYISI
ß= JOINT ANGLE / BEUGEWINKEL / MAFSAL AÇISI
L = MINIMUM FACE TO FACE LENGTH AVAILABLE / KLEINSTE ZUSAMMENGESCHOBENE LAENGE / MÜMKÜN OLABİLİR MİN. KAPALI ŞAFT BOYU

# UZMANKARDAN

## 78 MIDSHIP EXTENSION SHAFTS WITH CENTER BEARING / GELENKZWISCHENWELLEN MIT ZWISCHENWELLENLAGER / ARAYATAKLI ÖN ŞAFTLAR

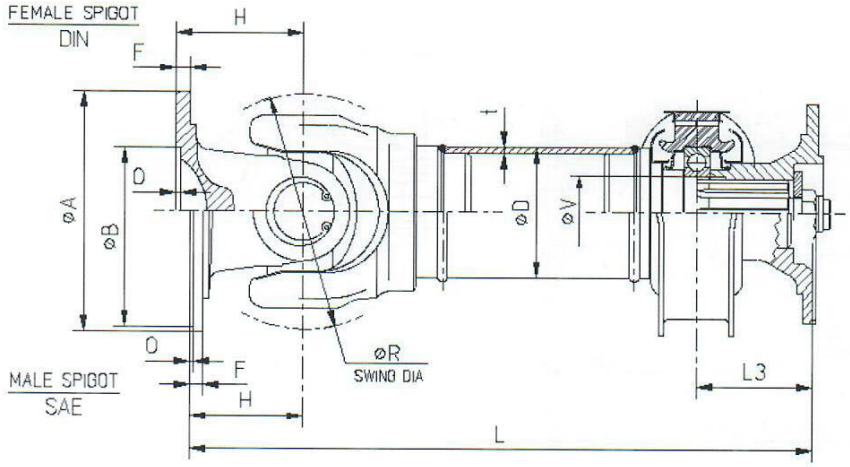


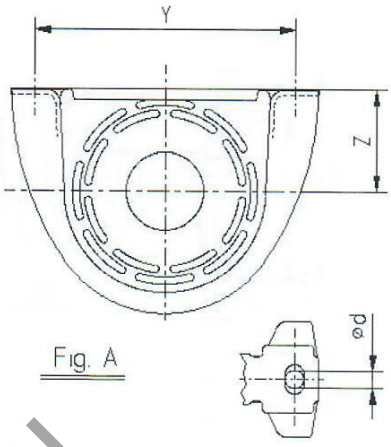


Fig. A

CROSS TOOTH SERRATED
XS

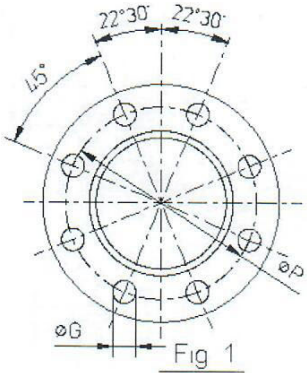


Fig 1

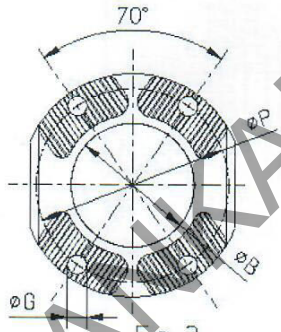


Fig 2

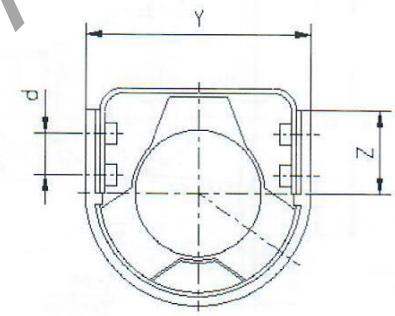


Fig B

**KAT-71/4** **19/01/2008**

| SERIE BAUGR SERİ | CATALOGUE NO KATALOG NR KATALOG NO | FIG | A | B | Dxt | F | H | L3 | L (min) | O | P | R | V | Y | Z | d | ß° | CONNECTION ANSCHLUSS A,TYPExExG | SPLINE |
|---|---|---|---|---|---|---|---|---|---|---|---|---|---|---|---|---|---|---|---|
| 381 | 71.381.510 | XS,2A | 120 | - | 88,9x2,4 | 16,5 | 70,0 | 89,5 | 321 | - | 100,0 | 126 | 45 | 193,8 | 69,1 | 12,7 | 22° | 120 XSx4x11,1 | 45x2,5x16 DIN5480 |
| 385 | 71.385.010 | DIN,1A | 150 | 90,0 | | 12,0 | 75,0 | 92,0 | 355 | 3,5 | 130 | 148 | 55 | 193,8 | 71,4 | 14,2 | 25° | 150 DINx8x12,2 | 55x2,5x20 DIN5480 |
| | 71.385.100 | SAE,1A | 175 | 168,2 | | 10,5 | 82,5 | 87,5 | 357 | 2,5 | 155,6 | 148 | 55 | 193,8 | 71,4 | 14,2 | 25° | 175 SAEx8x9,7 | 55x2,5x20 DIN5480 |
| | 71.385.510 | XS,2A | 150 | - | 92x5 | 17,5 | 75,0 | 91,0 | 353 | - | 130,0 | 148 | 55 | 193,8 | 71,4 | 14,2 | 24° | 150 XSx4x13,1 | 55x2,5x20 DIN5480 |
| | 71.385.521 | XS,2A | 180 | - | | 16,0 | 90,0 | 94,5 | 372 | - | 150,0 | 148 | 55 | 193,8 | 71,4 | 14,2 | 25° | 180 XSx4x15,1 | 55x2,5x20 DIN5480 |
| | 71.385.020 | DIN,1A | 150 | 90,0 | | 12,0 | 75,0 | 94,5 | 360 | 3,5 | 130 | 148 | 55 | 219,0 | 85,7 | 14,4 | 25° | 150 DINx8x12,2 | 55x2,5x20 DIN5480 |
| | 71.385.511 | XS,2A | 150 | - | | 17,5 | 75,0 | 91,0 | 353 | - | 130,0 | 148 | 55 | 219,0 | 85,7 | 14,4 | 24° | 150 XSx4x13,1 | 55x2,5x20 DIN5480 |
| 389 | 71.389.503 | XS,2A | 150 | - | 100X5 | 17,5 | 85,0 | 110 | 407 | - | 130,0 | 159 | 60 | 230 | 85,7 | 17,0 | 30° | 150 XSx4x13,1 | 60x2,5x22 DIN5480 |
| | 71.389.502 | XS,2A | 180 | - | | 18,0 | 92,5 | 87,5 | 390 | - | 150,0 | 159 | 60 | 230 | 85,7 | 17,0 | 30° | 180 XSx4x15,1 | 60x2,5x22 DIN5480 |
| | 71.389.502 | XS,2A | 180 | - | | 18,0 | 92,5 | 110 | 414 | - | 150,0 | 159 | 60 | 230 | 85,7 | 17,0 | 30° | 180 XSx4x15,1 | 60x2,5x22 DIN5480 |
| | 71.389.510 | XS,2A | 150 | - | 100X5 | 17,5 | 85,0 | 110 | 407 | - | 130,0 | 159 | 60 | 219,2 | 85,7 | 14,4 | 30° | 150 XSx4x13,1 | 60x2,5x22 DIN5480 |
| | 71.389.500 | XS,2A | 180 | - | | 18,0 | 92,5 | 87,5 | 390 | - | 150,0 | 159 | 60 | 219,2 | 85,7 | 14,4 | 30° | 180 XSx4x15,1 | 60x2,5x22 DIN5480 |
| | 71.389.500 | XS,2A | 180 | - | | 18,0 | 92,5 | 110 | 414 | - | 150,0 | 159 | 60 | 219,2 | 85,7 | 14,4 | 30° | 180 XSx4x15,1 | 60x2,5x22 DIN5480 |
| | 71.389.504 | XS,2A | 150 | - | 120X4 | 17,5 | 85,0 | 87,5 | 357 | - | 130,0 | 159 | 60 | 230 | 85,7 | 17,0 | 30° | 150 XSx4x13,1 | 60x2,5x22 DIN5480 |
| | 71.389.505 | XS,2A | 180 | - | | 18,0 | 92,5 | 87,5 | 365 | - | 150,0 | 159 | 60 | 230 | 85,7 | 17,0 | 30° | 180 XSx4x15,1 | 60x2,5x22 DIN5480 |
| | 71.389.506 | XS,2A | 150 | - | 120X4 | 17,5 | 85,0 | 87,5 | 357 | - | 130,0 | 159 | 60 | 219,2 | 85,7 | 14,4 | 30° | 150 XSx4x13,1 | 60x2,5x22 DIN5480 |
| | 71.389.507 | XS,2A | 180 | - | | 18,0 | 92,5 | 87,5 | 365 | - | 150,0 | 159 | 60 | 219,2 | 85,7 | 14,4 | 30° | 180 XSx4x15,1 | 60x2,5x22 DIN5480 |
| 395 | 71.395.500 | XS,1A | 180 | - | 110x6 | 17,5 | 95 | 110 | 418 | - | 150,0 | 178 | 65 | 230 | 85,7 | 17,0 | 27° | 180 XSx4x15,1 | 65x2x31 DIN5480 |
| | 71.395.501 | XS,1A | 180 | - | 110x6 | 17,5 | 95 | 110 | 418 | - | 150,0 | 178 | 65 | 219 | 85,7 | 17,0 | 27° | 180 XSx4x15,1 | 65x2x31 DIN5480 |
| | 71.395.502 | XS,1A | 180 | - | 110x6 | 17,5 | 95 | 87,5 | 418 | - | 150,0 | 178 | 65 | 219 | 85,7 | 17,0 | 27° | 180 XSx4x15,1 | 65x2x31 DIN5480 |
| 446 | 71.381.510 | XS,2A | 180 | - | 120x4 | 17,5 | 87 | 87,5 | 370 | - | 150,0 | 170 | 60 | 219 | 85,7 | 35,0 | 25° | 180 XSx4x15,1 | 60x2,5x22 DIN5480 |
| 468 | 71.468.510 | XS,2B | 180 | - | 110x6 | 17,5 | 100 | 110 | 430 | - | 150,0 | 178 | 70 | 190 | 88,2 | - | 22° | 180 XSx4x15,1 | 70x2,5x26 DIN5480 |
| | 71.468.520 | XS,2B | 180 | - | 140X5 | 17,5 | 100 | 110 | 450 | - | 150,0 | 178 | 70 | 190 | 88,2 | - | 22° | 180 XSx4x15,1 | 70x2,5x26 DIN5480 |

E= NUMBER OF HOLES / LOCHANZAHL / DELİK SAYISI
ß= JOINT ANGLE / BEUGEWINKEL / MAFSAL AÇISI
L = MINIMUM FACE TO FACE LENGTH AVAILABLE / KLEINSTE ZUSAMMENGESCHOBENE LAENGE / MÜMKÜN OLABİLİR MİN. KAPALI ŞAFT BOYU

## PROPELLER SHAFTS FOR VARIOUS APPHICATIONS / GELENKWELLEN / ÇEŞİTLİ ŞAFTLAR



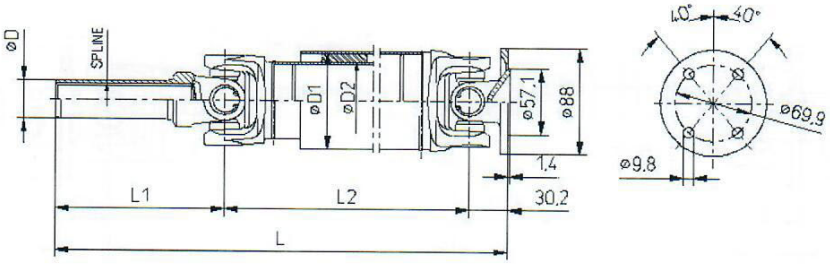


Fig. 1

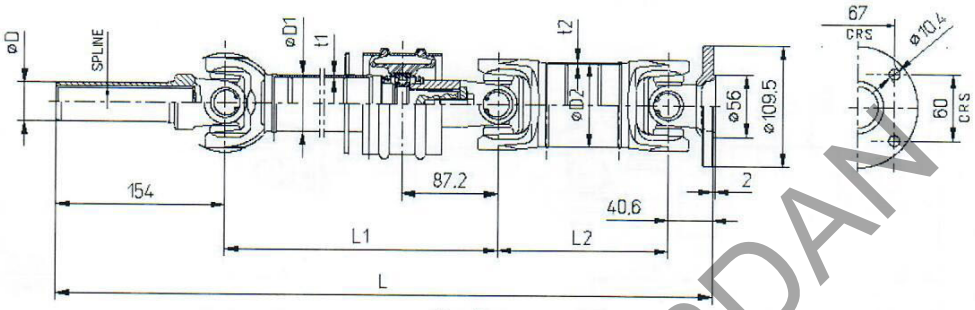


Fig. 2

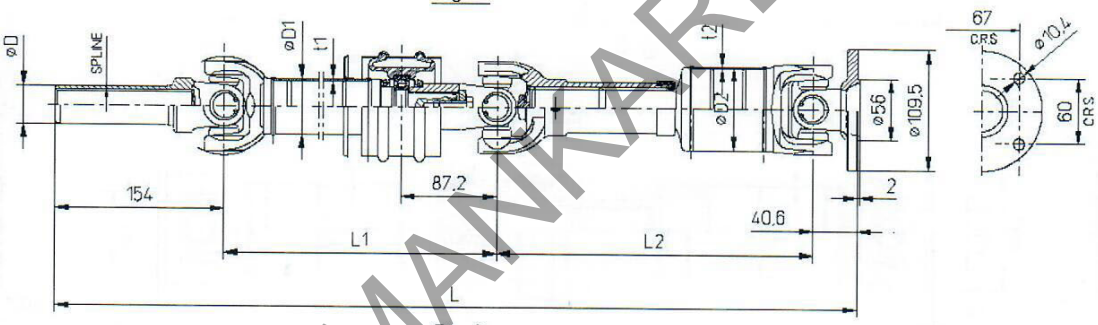


Fig. 3

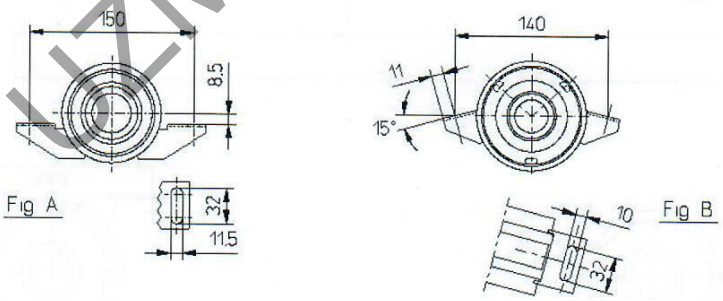


Fig A

Fig B



KAT-73/1

18/03/02

| SERIE BAUGR SERİ | PART NO. TEIL NR. PARÇA NO. | REF. | FIG | L | L1 | L2 | Ø D | Ø D1 x t1 | BEARING LAGER RULMAN | Ø D2 x t2 | ß° | CONNECTION ANSCHLUSS A x E x G | SPLINE |
|---|---|---|---|---|---|---|---|---|---|---|---|---|---|
| 1140 | 5114706900 | - | 1 | 1382 | 148 | 1204 | 34,9 | 3" x 0,064" | - | 2,5"x0,064" | 15° | 87,7 x 4 x 8,1 | D:28 P.D:24/32 Z:25 |
| | 5114708001 | - | 1 | 1458 | 148 | 1280 | 34,9 | 3" x 0,064" | - | 2,5"x0,064" | 15° | 87,7 x 4 x 8,1 | D:28 P.D:24/32 Z:25 |
| 1300 | 51307302600 | - | 2A | 1795 | 763 | 838 | 34,9 | 2" x 0,095" | Ø30 | 2" x 0,095" | 15° | 109,5 x 4 x 10,4 | D:28 P.D:24/32 Z:25 |
| | 51307302601 | - | 2A | 1850 | 818 | 838 | 34,9 | 2" x 0,095" | Ø30 | 2" x 0,095" | 15° | 109,5 x 4 x 10,4 | D:28 P.D:24/32 Z:25 |
| | 51307302700 | - | 2B | 1860 | 827 | 879 | 32,9 | 2" x 0,095" | Ø30 | 2" x 0,095" | 15° | 109,5 x 4 x 10,4 | SAE 1" x 10C |
| | 51307303601 | - | 3B | 1790 | 776 | 819 | 34,9 | 2" x 0,095" | Ø30 | 2" x 0,095" | 15° | 109,5 x 4 x 10,5 | D:28 P.D:24/32 Z:25 |
| | 51307304602 | 90PT-4602-DA | 2A | 1725 | 525 | 1006 | 34,9 | 2" x 0,095" | Ø30 | 3" x 0,064" | 15° | 109,5 x 4 x 10,5 | D:28 P.D:24/32 Z:25 |
| | 51307305400 | - | 2B | 1795 | 763 | 838 | 34,9 | 2" x 0,095" | Ø30 | 2" x 0,095" | 15° | 109,5 x 4 x 10,5 | D:28 P.D:24/32 Z:25 |
| | 51307305401 | - | 2B | 1850 | 818 | 838 | 34,9 | 2" x 0,095" | Ø30 | 2" x 0,095" | 15° | 109,5 x 4 x 10,5 | D:28 P.D:24/32 Z:25 |

E= NUMBER OF HOLES / LOCHANZAHL / DELİK SAYISI
ß= JOINT ANGLE / BEUGEWINKEL / MAFSAL AÇISI

# PROPELLER SHAFTS FOR VARIOUS APPLICATIONS / GELENKWELLEN / ÇEŞİTLİ ŞAFTLAR

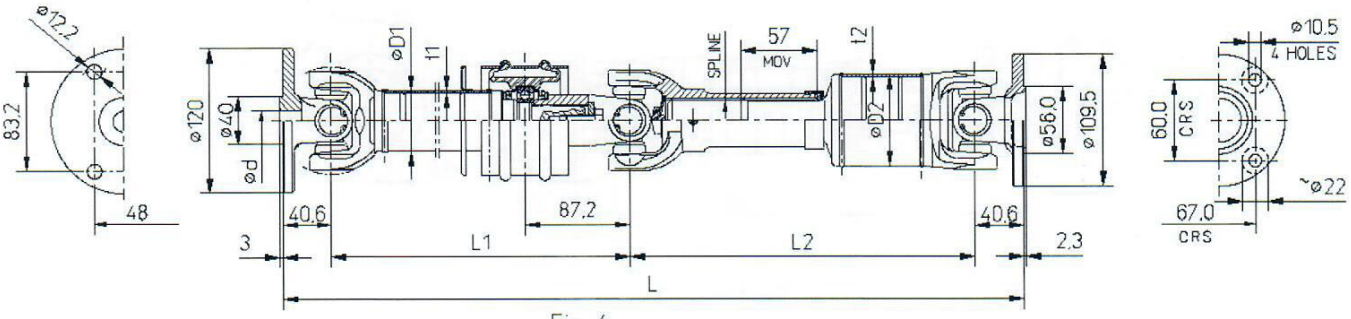


Fig. 4

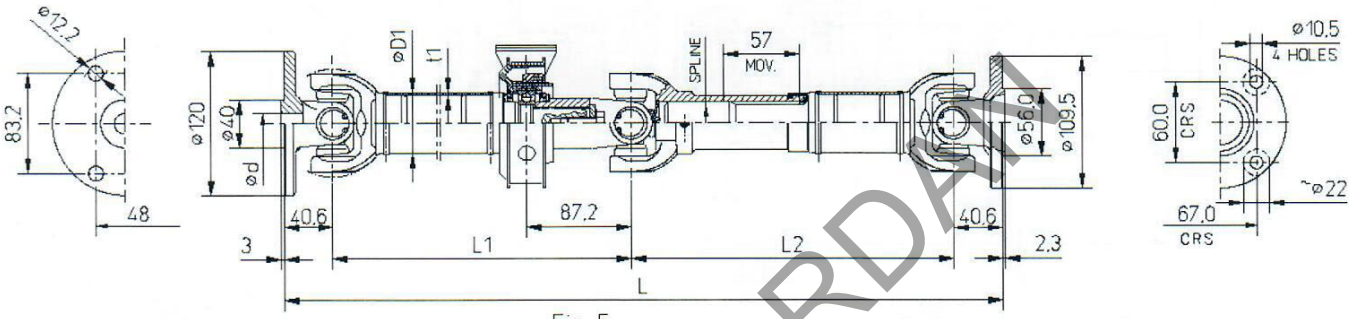


Fig 5

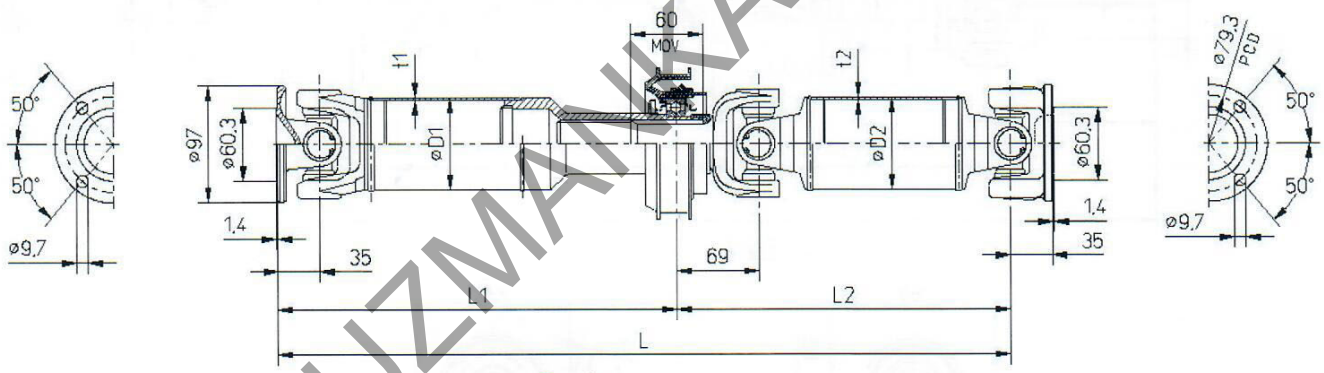


Fig. 6

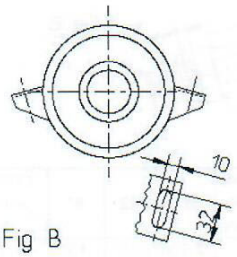


Fig B

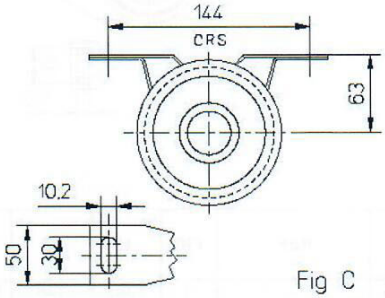


Fig C

KAT-73/2 18/03/02

| SERIE BAUGR SERI | PART NO. TEIL NR. PARÇA NO. | REF. | FIG | L | L1 | L2 | Ø d | Ø D1 x t1 | BEARING LAGER RULMAN | Ø D2 x t2 | ß° | CONNECTION-1 ANSCHLUSS-1 A x E x G | CONNECTION-2 ANSCHLUSS-2 A x E x G |
|---|---|---|---|---|---|---|---|---|---|---|---|---|---|
| 1300 | 51307302500 | 88VB-4K145-AB | 4B | 1866 | 907 | 877 | 17,00 | 2" x 0,095" | Ø30 | 3" x 0,064" | 15° | 109,5 x 4 x 10,4 | 120 x 4 x 12,2 |
| | 51307304701 | 92VT-4K145-B1A | 5C | 1985 | 839 | 1065 | 17,00 | 2" x 0,095" | Ø30 | 3" x 0,064" | 15° | 109,5 x 4 x 10,4 | 120 x 4 x 12,2 |
| 1310 | 51317300201 | - | 6C | 2202 | 784 | 1383 | - | 3" x 0,064" | Ø45 | 3" x 0,064" | 20° | 97 x 4 x 9,7 | 97 x 4 x 9,7 |

E= NUMBER OF HOLES / LOCHANZAHL / DELİK SAYISI
ß= JOINT ANGLE / BEUGEWINKEL / MAFSAL AÇISI

## PROPELLER SHAFTS "FORD" / GELENKWELLEN "FORD" / FORD ŞAFTLARI



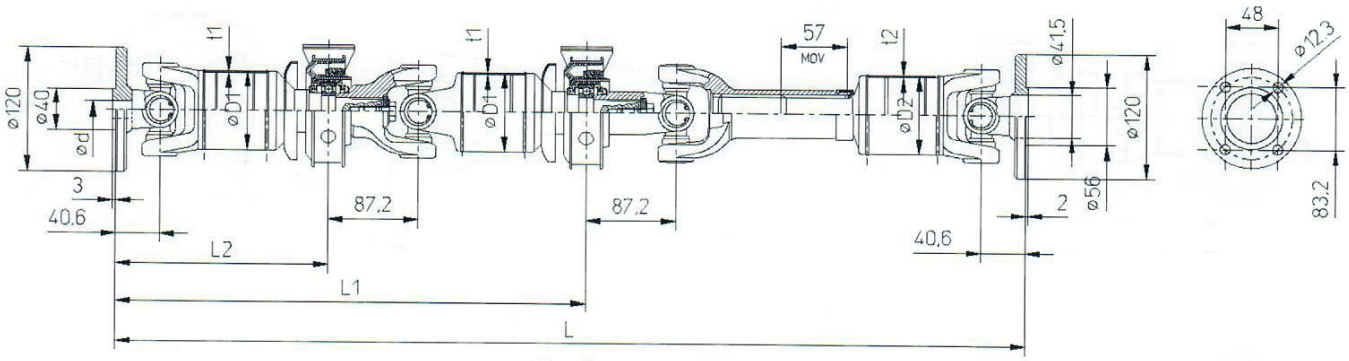


Fig. 7

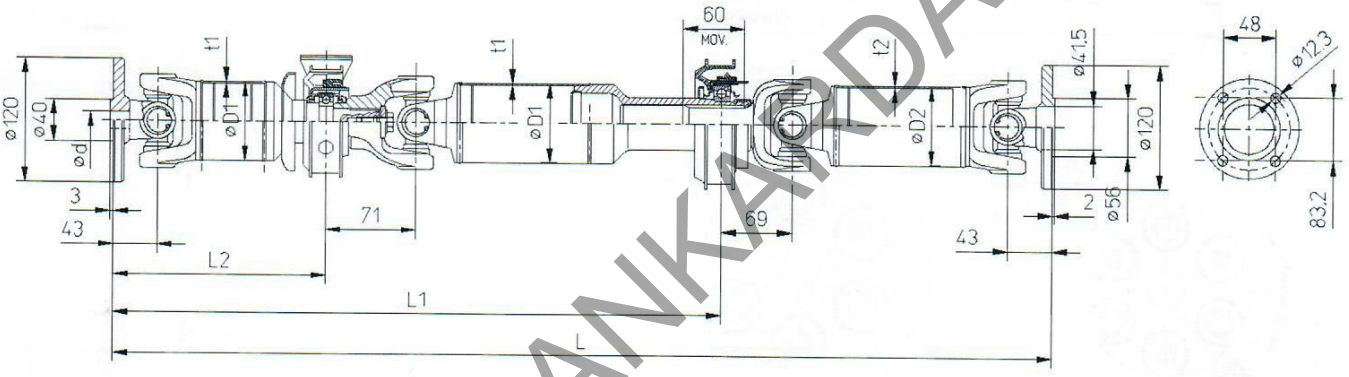


Fig. 8

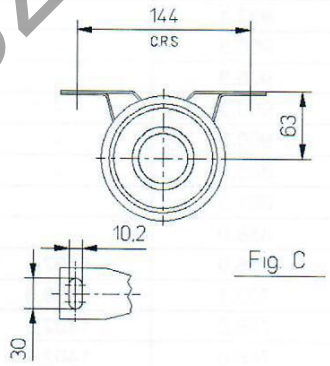


Fig. C



KAT-73/3

18/03/02

| SERIE BAUGR SERI | PART NO. TEIL NR. PARÇA NO. | REF. | FIG | L | L1 | L2 | Ø d | Ø D1 x t1 | BEARING LAGER RULMAN | Ø D2 x t2 | ß° | CONNECTION-1 ANSCHLUSS-1 A x E x G | CONNECTION-2 ANSCHLUSS-2 A x E x G |
|---|---|---|---|---|---|---|---|---|---|---|---|---|---|
| 1300 | 51307305201 | 92VT-4K357-A1C | 7C | 2688 | 1482 | 863 | 17,00 | 3" x 0,064" | Ø30 | 3" x 0,064" | 15° | 120 x 4 x 12,3 | 120 x 4 x 12,2 |
| 1310 | 51317300101 | 95VT-4K357-A2B | 8C | 2688 | 1482 | 863 | 17,00 | 3" x 0,064" | Ø45 | 3" x 0,064" | 15° | 120 x 4 x 12,3 | 120 x 4 x 12,2 |

E= NUMBER OF HOLES / LOCHANZAHL / DELİK SAYISI
ß= JOINT ANGLE / BEUGEWINKEL / MAFSAL AÇISI

## 82 PROPELLER SHAFTS "FORD" / GELENKWELLEN "FORD" / FORD ŞAFTLARI

FIG.2

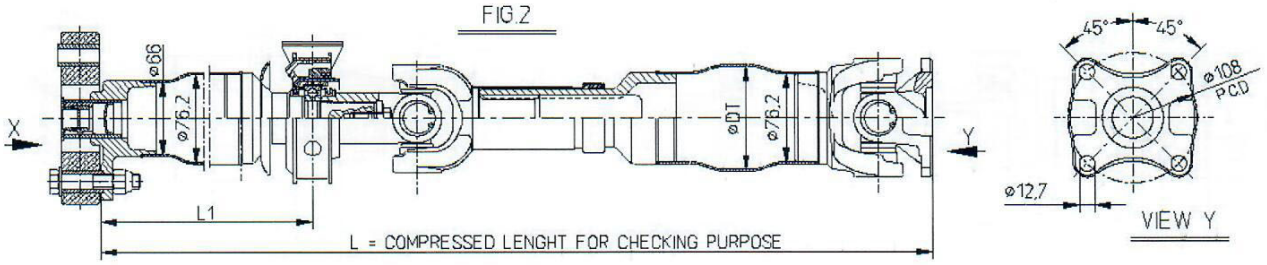


FIG.3

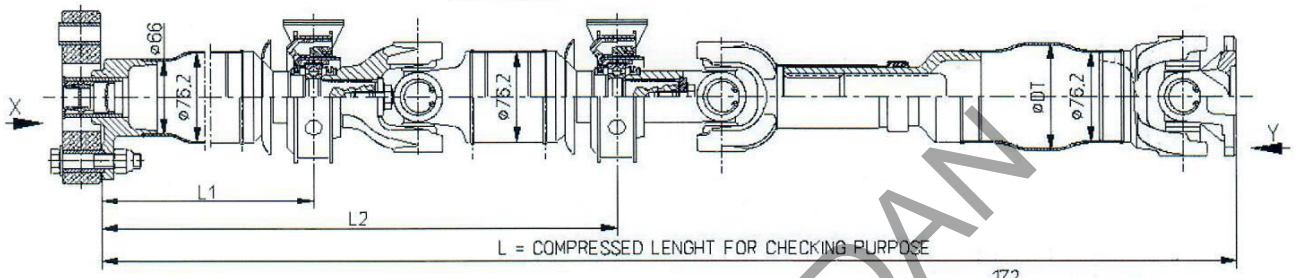


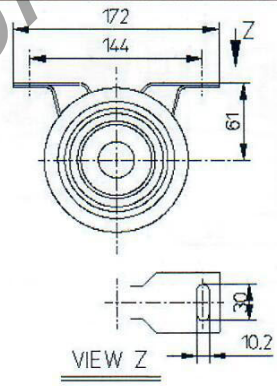


VIEW X
FIG. A

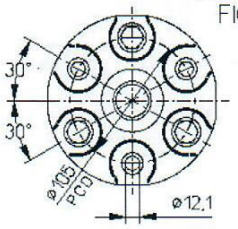


VIEW X
FIG. B

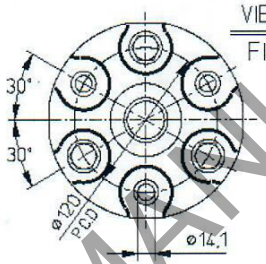


KAT-73F 03/01/2006

| AKKARDAN PART NO: | FIG | L | L1 | L2 | ØDT | ß° |
|---|---|---|---|---|---|---|
| 73F.420.211 | 2A | 2025,0 | 892,1 | - | 101,6 | 15 |
| 73F.420.212 | 2A | 2025,0 | 900,3 | - | 88,9 | 15 |
| 73F.420.213 | 2A | 2227,1 | 900,3 | - | 101,6 | 15 |
| 73F.420.214 | 2A | 1984,9 | 900,3 | - | 88,9 | 15 |
| 73F.420.215 | 2A | 2187,1 | 900,3 | - | 101,6 | 15 |
| 73F.420.221 | 2B | 1953,7 | 868,0 | - | 88,9 | 15 |
| 73F.420.222 | 2B | 2155,8 | 861,3 | - | 101,6 | 15 |
| 73F.420.223 | 2B | 2155,8 | 868,0 | - | 101,6 | 15 |
| 73F.420.311 | 3A | 2328,7 | 766,0 | 1402,1 | 76,2 | 15 |
| 73F.420.312 | 3A | 2489,0 | 703,1 | 1338,8 | 101,6 | 15 |
| 73F.420.313 | 3A | 2553,2 | 766,0 | 1402,1 | 88,9 | 15 |
| 73F.420.314 | 3A | 2593,2 | 766,0 | 1402,1 | 88,9 | 15 |
| 73F.420.315 | 3A | 2798,3 | 766,0 | 1706,8 | 88,9 | 15 |
| 73F.420.316 | 3A | 2838,3 | 766,0 | 1706,8 | 88,9 | 15 |
| 73F.420.317 | 3A | 2992,0 | 765,1 | 1705,4 | 101,6 | 15 |
| 73F.420.318 | 3A | 3000,4 | 766,0 | 1706,8 | 101,6 | 15 |
| 73F.420.319 | 3A | 3040,4 | 766,0 | 1706,8 | 101,6 | 15 |
| 73F.420.321 | 3B | 2297,4 | 734,2 | 1370,3 | 76,2 | 15 |
| 73F.420.322 | 3B | 2521,9 | 734,2 | 1370,3 | 88,9 | 15 |
| 73F.420.323 | 3B | 2767,0 | 734,2 | 1675,0 | 88,9 | 15 |
| 73F.420.324 | 3B | 2969,1 | 734,2 | 1675,0 | 101,6 | 15 |

ß° - MAX. ANGULAR MOVEMENT / MAX. BEUGEWINKEL / MAX. ÇALIŞMA AÇISI

# PEUGEOT



## PROPELLER SHAFTS / ANTRIEBSWELLEN / SAFTLARI

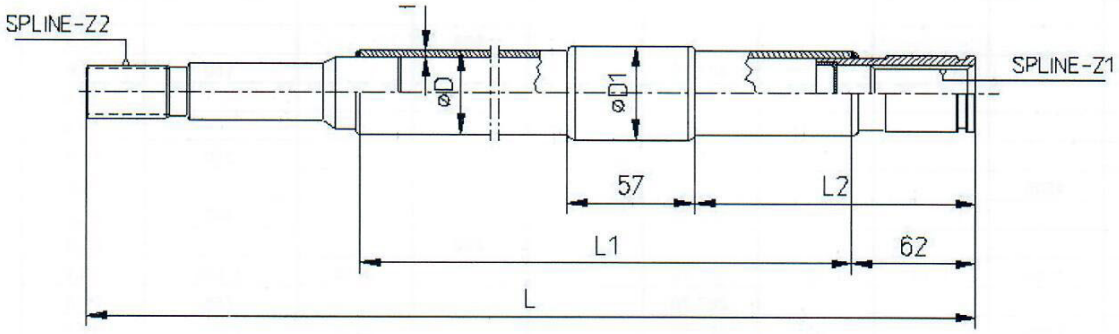


Fig. 1

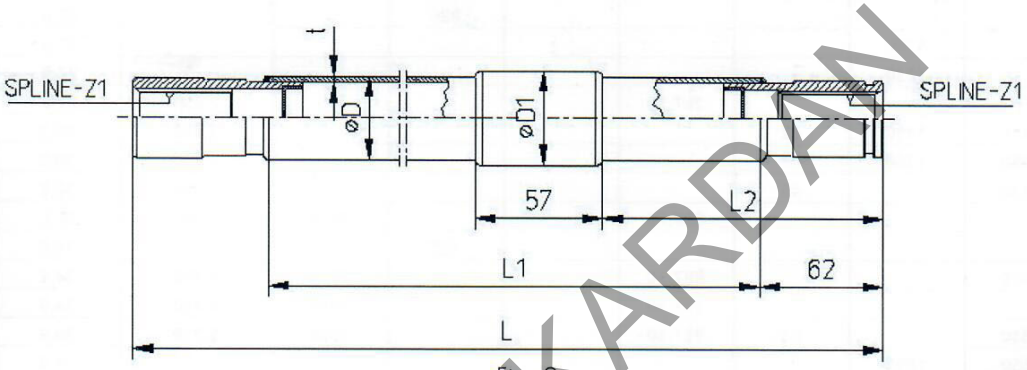


Fig. 2

## JOINTS / GELENK / MAFSALLAR

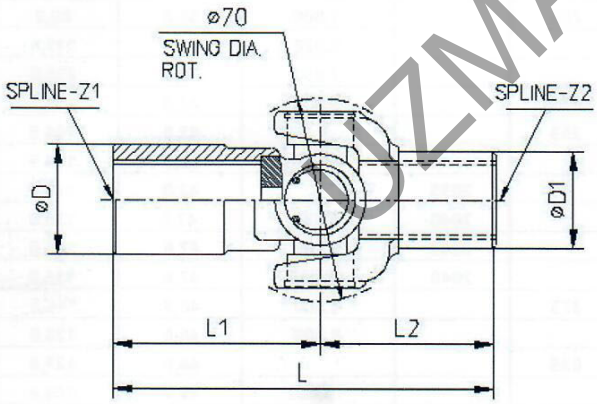


Fig. 3

## C. BEARINGS / ZWISCHENWELLENLAGER / ARAYATAKLAR

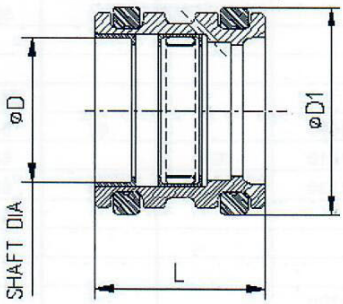


Fig. 4

**KAT-70/PEUGEOT** **18/03/02**

| PART NO<br>TEIL NR<br>PARÇA NO | REF. | FIG | L | L1 | L2 | Ø D | t | Ø D1 | SPLINE DATA-Z1<br>ZAHNPROFIL-Z1<br>KANAL ÖLÇÜLERI-Z1 | SPLINE DATA-Z2<br>ZAHNPROFIL-Z2<br>KANAL ÖLÇÜLERI-Z2 |
|---|---|---|---|---|---|---|---|---|---|---|
| 51147008401 | 2801.50 | 1 | 1826 | 1628 | 915 | 42,0 | 3 | 47,00 | D:28,0 D.P:24/48 Z:25 | D:27,4 D.P:24/48 Z:25 |
| 51147008402 | 2801.51 | 1 | 1667 | 1469 | 803 | 42,0 | 3 | 47,00 | D:28,0 D.P:24/48 Z:25 | D:27,4 D.P:24/48 Z:25 |
| 51147008403 | 2801.54 | 1 | 1928 | 1730 | 964 | 42,0 | 3 | 47,00 | D:28,0 D.P:24/48 Z:25 | D:27,4 D.P:24/48 Z:25 |
| 51147008501 | 2801.60 | 2 | 1725 | 1596 | 798 | 42,0 | 3 | 47,00 | D:28,0 D.P:24/48 Z:25 | - |
| 51147008601 | 2801.49 | 1 | 1826 | 1628 | 915 | 42,0 | 3 | 47,00 | D:28,0 D.P:24/48 Z:25 | D:25 MOD:1,9 P.A:30° Z:12 |
| 40009900100 | 2619.17 | 3 | 139,2 | 75,4 | 63,8 | 40,0 | - | 35,0 | D:28,0 D.P:24/48 Z:25 | D:28,0 D.P:24/48 Z:25 |
| 40009900200 | 2619.16 | 3 | 131,4 | 75,4 | 56,0 | 40,0 | - | 35,0 | D:28,0 D.P:24/48 Z:25 | D:25 MOD:1,9 P.A:30° Z:12 |
| 40004804700 | 2806.08 | 4 | 62,0 | - | - | 47,0 | - | 75,0 | - | - |

## CROSS REF. LIST FOR SERIES / REF. LISTE FÜR SERIE / SERİLER REF. LİSTESİ

| AKKARDAN | H. SPICER | D. SPICER | B R D | G W B | D. BENZ | KLEIN | G K N | Nm ( APPROX. ) | U. J.KIT / ØD | U.J.KIT / L |
|---|---|---|---|---|---|---|---|---|---|---|
| 020 | | | | | | | | | 15,0 | 38,0 |
| 032 | | | | | | 008 | | | 15,0 | 40,2 |
| 410 | | | | 473.10 | | | | 150 | 15,0 | 41,0 |
| 030 | | | | | | | | | 16,0 | 38,0 |
| 040 | | | | | | | | | 19,0 | 48,5 |
| 412 | | | | 473.20 | | | | 250 | 19,0 | 49,2 |
| | 0500 | | | | | | | | 19,0 | 52,0 |
| 414 | | | | 473.30 | | | | 400 | 22,0 | 59,0 |
| | | | | | | 030 | | | 23,0 | 52,2 |
| 1140 | 1140 | 1110 | 23 | 687.10 | | | 2010 | 1.130 | 23,8 | 61,3 |
| 416 | | | | 287.00 | | | | 755 | 26,0 | 69,8 |
| 1300 | 1300 | | 33 | 687.15 | | | 2015 | 1.630 | 27,0 | 74,6 |
| 1310 | 1310 | | 36 | | | | | 1.940 | 27,0 | 81,8 |
| | | 1210 | | | | | | | 27,0 | 61,9 |
| | | | | | | 080 | | | 27,0 | 66,1 |
| | | 1280 | | | | | | | 27,0 | 81,8 |
| | | 1330 | | | | | | | 27,0 | 92,0 |
| 287 | | | | 287.10 | | | | 2.800 | 30,0 | 81,8 |
| 1410 | 1410 | 1410 | 42 | | | | | 3.400 | 30,2 | 106,3 |
| 1350 | 1350 | 1350 | 40 | | | | | 2.770 | 30,2 | 92,0 |
| 1430 | 1430 | | 43 | | | | | 3.390 | 30,2 | 92,1 |
| 420 | | | | 687.20 | | | 2020 | 2.800 | 30,2 | 81,8 |
| | | | | | | 125 | | | 34,0 | 89,0 |
| 1480 | 1480 | | | 687.30 | | | 2030 | 4.480 | 34,9 | 106,3 |
| 1520 | | | | 687.30 | | | 2030 | 4.480 | 34,9 | 106,3 |
| 1530 | 1530 | | 53 | 687.30 | | | 2030 | 5.310 | 34,9 | 106,3 |
| 1550 | 1550 | 1550 | | | | | | | 34,9 | 127,0 |
| 425 | | | | 687.25 | | | 2025 | | 34,9 | 92,0 |
| 422 | | | | 287.20 | | | | 2.400 | 35,0 | 96,8 |
| 424 | | | | 587.10 | | 023 | | 3.300 | 35,0 | 96,8 |
| | | | | | | 025 | | | 38,0 | 104,0 |
| | | | | 387.20 | | | | | 38,0 | 105,8 |
| 350 | | | | | | 200 | | 1.800 | 38,0 | 89,2 |
| 1510 | 1510 | | 52 | | | | | 5.020 | 39,7 | 115,8 |
| 1630 | 1630 | | 63 | | | | | 7.050 | 39,7 | 115,8 |
| 438 | | | | 587.15 | | 253 | | 5.000 | 42,0 | 104,5 |
| | | | | | | 253 | | | 42,0 | 104,5 |
| 381 | | | | | GW2E | | | 4.500 | 42,0 | 106,0 |
| 432 | | | | 687.35 | | | 2035 | | 42,0 | 119,4 |
| 1600 | 1600 | | 62 | 687.40 | | | 2040 | 6.920 | 47,6 | 135,0 |
| 1610 | 1610 | 1610 | | 687.40 | | | 2040 | 6.900 | 47,6 | 135,0 |
| 1730 | 1730 | | 73 | 687.40 | | | 2040 | 11.200 | 47,6 | 135,0 |
| 430 | | | | 587.20 | | 375 | | 6.500 | 48,0 | 116,5 |
| 385 | | | | 186.33 | GW3E | | | 8.000 | 48,0 | 126,0 |
| | | | | | | 035 | | | 48,0 | 127,5 |
| 1700 | 1700 | | 72 | | | | | 10.980 | 49,2 | 154,8 |
| 1710 | 1710 | 1710 | | | | | | 11.000 | 49,2 | 154,8 |
| 1830 | 1830 | | 83 | 687.50 | | | 2050 | 16.180 | 49,2 | 154,8 |
| 1760 | 1760 | 1760 | | | | | | | 49,2 | 177,8 |
| 1820 | | 1810 | | | | | | | 49,2 | 191,5 |
| 434 | | | | 587.30 | | 400 | | 10.000 | 52,0 | 133,0 |
| 445 | | | | 687.45 | | | 2045 | | 52,0 | 147,2 |
| 389 | | | | 186.37 | GW4E | 503 | | 12.000 | 53,0 | 135,0 |
| 446 | | | | | | | | | 53,0 | 147,2 |
| 436 | | | | 587.35 | | 600 | | 12.000 | 57,0 | 144,0 |
| 395 | | | | 687.55 | GW5E | 650 | 2055 | 17.000 | 57,0 | 152,0 |
| 1800 | 1800 | 1800 | 82 | 687.60 | | | 2060 | 15.860 | 59,0 | 167,5 |
| 1810 | 1810 | | | 687.60 | | 630 | 2060 | 16.000 | 59,0 | 167,5 |
| 444 | | | | 587.48 | | 700 | 2065 | 18.000 | 65,0 | 172,0 |
| 468 | | | | | GW5E | | | 22.000 | 68,0 | 166,0 (89,0) |
| | | | | 587.55 | | | | | 74,0 | 217,0 |

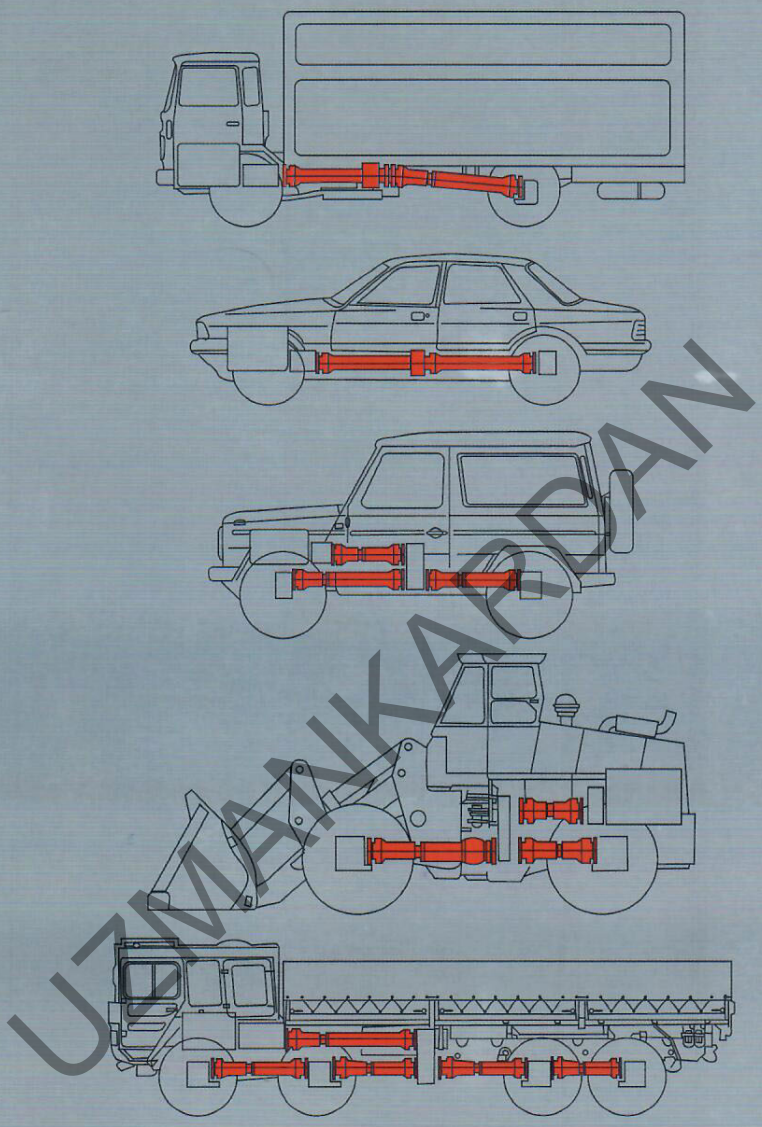



# UZMANKARDAN

UZMAN KARDAN MAKİNA OTOMOTİV SAN TİC LTD ŞTİ